offers from, discussions with, or any agreements or commitments with any Person (other than Tenant) with respect to a lease for all or any portion of the Premises shall be subject to Tenant's rights under this Article 33.

(f) If Tenant fails to satisfy the requirements or timely exercise the First Renewal Right or Second Renewal Right in the time and manner set forth in this Article 33, such rights shall be null and void and of no further force and effect. Upon request by Landlord, Tenant shall execute a writing confirming same.

ARTICLE XXXIV

SECURITY DEPOSIT

34.1 Security Deposit.

(a) Upon the execution of this Lease, Tenant shall deliver to Landlord, and Tenant shall maintain in effect at all times thereafter until the thirtieth (30th) day following the Opening Date, as collateral for the full and faithful performance and observance by Tenant of Tenant's covenants and obligations under this Lease, a clean, unconditional irrevocable letter of credit in the amount of Four Million Dollars ($4,000,000), substantially in the form annexed hereto as **Exhibit O** and issued by a federally-chartered banking corporation (the "Bank") with a credit criteria rating of long term unsecured debt at an "A3" or better under Moody's Rating System or a single "A" or better under Standard & Poor's Rating System and having its principal place of business or a duly licensed branch or agency in the borough of Manhattan, City and County of New York (such letter of credit and such extensions or replacements thereof, as the case may be, is herein called a "Letter of Credit"). If the Bank is downgraded and no longer has a credit criteria rating of long term unsecured debt at an "A3" or better under Moody's Rating System or single "A" or better under Standard & Poor's Rating System, Tenant shall deliver an acceptable replacement letter of credit from a different credit issuer within five (5) business days after Landlord's written request following such occurrence. Notwithstanding the foregoing, so long as, as of the date of Tenant's request, (x) Tenant shall not have exercised the Early Termination with respect to the Permit Termination Conditions, (y) the Guaranties are effective, and (z) there is no Event of Default, then Tenant may request that Landlord countersign the Step-Down Letter. After confirming the satisfaction of the foregoing conditions, Landlord shall countersign and return the Step-Down Letter to Tenant, and thereafter Tenant may submit the fully executed Step-Down Letter to the issuing bank and direct the issuing bank to reduce the Letter of Credit from Four Million Dollars ($4,000,000) to Two Million Ninety Six Thousand Three Hundred and Eight Dollars ($2,096,308). In connection with the Step-Down Letter, Landlord and Tenant shall execute such further document, including any necessary amendment from the issuing bank, reasonably requested by the issuing bank to reflect such reduction. The Letter of Credit shall not be deemed to be reduced until Tenant provides Landlord with a new or endorsed Letter of Credit indicating the reduction pursuant to the Step-Down Letter. Any such letter of credit shall have an expiration date no earlier than the first anniversary of the date of issuance thereof and shall be automatically renewed from year to year unless terminated by the issuer thereof by written notice to Landlord given not less than sixty (60) days prior to the termination thereof. Tenant shall, until the thirtieth (30th) day following the Opening Date, deliver to Landlord, in the event of the termination of the Letter of Credit, replacement letters of credit in lieu thereof no later than thirty (30) days prior to the termination date of the preceding Letter of Credit. The term of the Letter of Credit shall be not less than one (1) year and subject to the next sentence shall be automatically renewable from year to year as aforesaid, without the requirement of an amendment therefor. Notwithstanding the foregoing, (x) if Landlord shall elect (in writing), in its sole discretion, to accept a Letter of Credit which is subject to a final expiration date or (y) at such time it is not customary for banks to issue letters of credit which automatically renew from year to year (i.e., so called "evergreen letters of credit"), then in either case, Tenant shall deliver a replacement of or amendment to such Letter of Credit no later than

thirty (30) days prior to such final expiration date, and the final Letter of Credit delivered to Landlord shall have a final expiration date occurring not earlier than the thirtieth (30th) day following the Opening Date. Any such replacement or amendment to the Letter of Credit shall be on the same terms and conditions, and in the same amount, as the original Letter of Credit. At such time as Tenant delivers a replacement Letter of Credit to Landlord, Landlord shall return the Letter of Credit previously held by Landlord to Tenant. If Tenant shall fail to obtain any replacement of or amendment to a Letter of Credit within any of the applicable time limits set forth herein, Landlord shall have the right (but not the obligation), at its option, to draw down the full amount of the existing Letter of Credit and hold such amount as Cash Security (as defined herein) and use, apply and retain the same, and notwithstanding such draw by Landlord, Landlord shall retain all other rights and remedies that are available to Landlord under this Lease. Upon delivery to Landlord of any such replacement of or amendment to the Letter of Credit within the thirty (30) day period described in the preceding sentence, such default shall be deemed cured and Landlord shall return to Tenant the proceeds of the Letter of Credit which had been drawn by Landlord pursuant to the preceding sentence (if any balance thereof remains following application to cure Tenant's defaults). Provided that Tenant is not in default under this Lease, then within sixty (60) days after the thirtieth (30th) day following the Opening Date, Landlord shall return the Letter of Credit and Cash Security (if any and less any amounts that have been applied to cure a default by Tenant) to Tenant together with a letter from Landlord confirming that all of its rights to such Letter of Credit have terminated and thereupon this Article 34 shall automatically terminate.

(b) If Tenant defaults in respect of the full and prompt payment or performance of any of the terms, provisions, covenants and conditions of this Lease beyond notice and the expiration of any applicable cure periods, Landlord may, at its election (but shall not be obligated to) draw down the entire Letter of Credit or any portion thereof and use, apply or retain the whole or any part thereof to the extent required for the payment of Rent or any other sum as to which Tenant is in default. Tenant shall replenish said Letter of Credit to the full amount required by Section 34.1(a) within five (5) business days from receipt of demand following any such draw, failure of which shall be an Event of Default with no further notice or cure period.

(c) If Tenant defaults in respect of any terms, provisions, covenants and conditions of this Lease beyond notice and the expiration of any applicable cure periods and Landlord utilizes all or any part of the security represented by the Letter of Credit but does not terminate this Lease, Landlord may, in addition to exercising its rights as provided in Section 34.1(b) hereof, retain the unapplied and unused balance of the portion of the Letter of Credit drawn down by Landlord (herein called the "Cash Security") as security for the faithful performance and observance by Tenant thereafter of the terms, provisions, and conditions of this Lease, and may use, apply, or retain the whole or any part of said Cash Security to the extent required for payment of Rent, or any other sum as to which Tenant is in default or for any sum which Landlord may expend or be required to expend by reason of Tenant's default in respect of any of the terms, covenants, and conditions of this Lease. No application of the Letter of Credit or Cash Deposit shall be construed to limit Landlord's right to recover additional sums from Tenant. Landlord shall not be required to maintain any portion of the Letter of Credit that becomes Cash Security hereunder in an account separate from Landlord's general accounts, and Tenant shall not be entitled to any interest that has accrued on such Cash Security.

(d) In the event of any sale, transfer or leasing of Landlord's Interest whether or not in connection with a sale, transfer or leasing of the Premises to a vendee, transferee or lessee (it being understood any such sale shall be subject to all of the other provisions of this Lease), Landlord shall have the right to transfer the Letter of Credit and the Cash Security (if any) to the vendee, transferee or lessee or, in the alternative, to require Tenant, upon not less than thirty (30) days prior notice, to deliver a replacement Letter of Credit naming the new landlord as beneficiary, and, upon such delivery by Tenant of such replacement Letter of Credit, Landlord shall return the existing Letter of Credit to Tenant together with an instrument from Landlord confirming that it no longer has an interest in such Letter of Credit

being so replaced (such exchange is intended to take place simultaneously). Upon such transfer or return of the Letter of Credit and the Cash Security (if any), Landlord shall thereupon be released by Tenant from all liability for the return thereof, and Tenant shall look solely to the new landlord for the return of the same; provided, that in the case of a transfer, Landlord shall provide Tenant with a copy of the assignment and assumption agreement of the Lease which shall include the assignment of the Letter of Credit and/or the Cash Security. The provisions of the preceding sentence shall apply to every subsequent sale, transfer or leasing of the Premises, and any successor of Landlord may, upon a sale, transfer, leasing or other cessation of the interest of such successors in the Premises, whether in whole or in part, transfer the Letter of Credit and the Cash Security (if any) to any vendee, transferee or lessee of the Premises (or require Tenant to deliver a replacement Letter of Credit as hereinabove set forth) and shall thereupon be relieved of all liability with respect thereto.

(e) In no event shall Tenant be entitled to apply the Letter of Credit or Cash Deposit (if any) to any Rent due hereunder. In the event of a Bankruptcy Action of or involving Tenant or any of its assets, then any Cash Deposit shall be deemed immediately assigned to Landlord. The right to retain or apply the Letter of Credit or Cash Deposit (if any) shall be in addition and not alternative to Landlord's other remedies under this Lease or as may be provided by law or as against Tenant and shall not be affected by summary proceedings to recover possession of the Premises.

ARTICLE XXXV

INTENTIONALLY OMITTED

ARTICLE XXXVI

GUARANTIES

36.1 Guaranties.

Simultaneously with the execution of this Lease, as additional collateral for the full and faithful performance and observance by Tenant or Tenant's covenants and obligations under this Lease, Guarantor shall execute and deliver:

(a) a guaranty substantially in the form as **Exhibit B-1** (the "Equity Guaranty"); and

(b) a guaranty substantially in the form as **Exhibit B-2** (the "Bad Acts Guaranty").

The Equity Guaranty and the Bad Acts Guaranty are collectively referred to herein as the "Guaranties." Notwithstanding the delivery of the Equity Guaranty upon execution of this Lease, the Equity Guaranty shall become effective upon Construction Commencement. The Bad Acts Guaranty shall be effective upon execution.

ARTICLE XXXVII

MISCELLANEOUS

37.1 Confidentiality.

Landlord shall keep confidential, as confidential commercial or financial information, and shall not divulge to any Person any Confidential Information, provided, however, Landlord shall not be precluded from making disclosure regarding Confidential Information (i) in circumstances in which

Tenant consents, which consent shall not be unreasonably withheld, (ii) to Landlord's counsel, accountants, and other professional advisors, who are not employees of Landlord but who need to know such information in performance of their work on behalf of the United States, provided that such counsel, accountants and advisors are instructed in writing not to disclose the Confidential Information, (iii) to Landlord's employees at the General Services Administration or any other agency or department of the United States who need to know such information in performance of their duties on behalf of the United States, and (iv) as required by law. If Landlord receives a request for Confidential Information pursuant to FOIA, Landlord will promptly notify Tenant of such request and shall follow its procedures for processing FOIA request for confidential commercial or financial information in accordance with the standards set forth in 41 CFR Part 105-60 as it may be amended or any successor regulation. Notwithstanding the foregoing, Tenant agrees to provide to Landlord a proposed redacted version (in accordance with FOIA) of this Lease within fifteen (15) days of execution of this Lease. Tenant understands and agrees that Landlord may make public such redacted version of this Lease. From time to time thereafter, within fifteen (15) days of request by Landlord, Tenant will have the option to provide to Landlord a proposed redacted version (in accordance with FOIA) of any other document related to the Premises as requested. For the avoidance of doubt, Tenant considers any statements and reports prepared by Tenant of a financial or commercial nature (including all Annual Statements, monthly statements, statements in connection with a Sale or Financing and Annual Budgets in each case prepared in accordance with Section 5.3) to be considered confidential and proprietary information under the Freedom of Information Act. The terms of this Section 37.1 shall survive termination or expiration of this Lease.

37.2 Governing Law.

This Agreement shall be governed by the federal laws of the United States of America, and if such laws are not applicable to the issue in question, then the issue shall be governed by the laws of the District of Columbia.

37.3 Successors and Assigns.

Subject to Article 15, the agreements, terms, covenants and conditions herein shall bind and inure to the benefit of Landlord and Tenant and their respective heirs, personal representatives, successors and (except as otherwise provided herein) assigns.

37.4 Construction and Interpretation.

The captions, headings or titles to the Articles and Sections of this Lease and the Table of Contents are not a part of this Lease, are for convenience of reference only, and shall have no effect upon the construction or interpretation of any part thereof. All provisions of this Lease have been negotiated by Landlord and Tenant at arm's length and with full representation of their respective legal counsel and neither party shall be deemed the drafter of this Lease. The language of this Lease shall not be construed for or against either party be reason of the authorship or alleged authorship of any provision hereof or by reason of the status of the respective parties as Landlord or Tenant. "Including," "includes," and "include" or words to similar effect shall be construed as followed by "without limitation." Certain terms used in this Lease are defined in the Exhibits and Schedules hereto.

37.5 Entire Agreement and Amendment.

This Lease, the Work Agreement, and the Programmatic Agreement (including the Exhibits and Schedules annexed hereto and made part hereof) contains all the representations, promises, agreements, conditions, inducements and understandings between Landlord and Tenant relative to the Premises and there are no promises, agreements, conditions, understandings, inducements, warranties or

representations, oral or written, expressed or implied, between them other than as herein set forth or expressly referenced herein and made a part hereof. This Lease may be modified only by an agreement in writing signed by each of the parties.

37.6 Brokers' Commissions.

Landlord represents and warrants to Tenant that Landlord has not incurred, directly or indirectly, any obligation to pay any real estate commission, brokerage commission or finder's fee to any agent, broker, salesperson or finder in connection with this transaction. Tenant represents and warrants to Landlord that Tenant has not incurred, directly or indirectly, any obligation to pay any real estate commission, brokerage commission or finder's fee to any agent, broker, salesperson or finder in connection with this transaction. Tenant agrees to indemnify Landlord hereunder in connection with any claims, losses, costs, damages or expenses arising out of a party's claim to have acted as a broker for Tenant in respect of this transaction or Lease.

37.7 References.

Unless otherwise specified, all references herein to the Table of Contents, or a given Article, Section or subsection in this Lease or the Work Agreement refer to the Table of Contents, Article, Section or subsection of this Lease or the Work Agreement, as applicable, and references to a "party" or "parties" shall refer to Landlord or Tenant, or both, as the context may require. The use herein of the words "successors and assigns" or "successors or assigns" of Landlord or Tenant shall be deemed to include the permitted assigns of any Landlord or Tenant.

37.8 Exhibits and Schedules.

The Exhibits and Schedules listed in the Table of Contents or to which reference is made in this Lease, in the Exhibits or in the Schedules, shall be deemed incorporated herein or in the Exhibits and Schedules in full whether or not actually attached hereto or thereto.

37.9 Counterparts and Signature Pages.

This Lease may be executed in two or more counterpart copies, all of which counterparts shall have the same force and effect as if all parties hereto had executed a single copy of this Lease.

37.10 Severability of Provisions.

If any term or provision of this Lease, or the application thereof to any Person or circumstance, shall be invalid or unenforceable, the remainder of this Lease, or the application of such term or provision to Persons or circumstances other than those as to which it is invalid or unenforceable, shall not be affected thereby, and each term and provision of this Lease shall be valid and be enforced to the fullest extent permitted by law.

37.11 Number and Gender.

Whenever the context requires, the singular number shall include the plural, the plural the singular, and the use of any gender shall include all genders.

37.12 Investment and Rehabilitation Tax Credit.

Tenant shall have the right to obtain the maximum permitted and allowable investment and rehabilitation tax credits arising from the Project and all work including construction work performed

pursuant to the terms of this Lease and the Work Agreement and, subject to the provisions and limitations of the United States Internal Revenue Code, Tenant shall be the sole party who shall be entitled to all such investment and rehabilitation tax credits. For the avoidance of doubt, Landlord shall have no claim or right whatsoever to any investment and rehabilitation tax credits. Tenant and Landlord shall cooperate to file snch reasonable documents as may be required or necessary under the Internal Revenue Code, and the Regulations thereunder, for Tenant to obtain such investment and rehabilitation tax credits and provided that Tenant obtaining such credits shall not constitute a condition to Tenant's obligations hereunder, failure to obtain such credits shall not excuse or delay any obligations of Tenant hereunder and Landlord makes no representation or warranty that such credits will be available to Tenant. Tenant shall reimburse Landlord for all costs including but not limited to, third-party out-of-pocket attorneys' fees and costs, consultants, accountants, hourly rates of Landlord's employees, other experts, associated with Landlord's review and filing of such documents provided in this Section 37.12. Prior to Landlord's initial review of Tenant's proposed changes to this Lease and any proposed master lease structure, Tenant shall advance to Landlord an initial amount estimated to cover Landlord's initial costs in connection with such review. Subject to Landlord's prior written approval, which approval may be granted or withheld in Landlord's reasonable discretion, Tenant may allocate federal historic tax credits to an investor, including the use of a master lease structure requiring the entire Premises to be subleased to an entity which will have, as a partner, member or shareholder, an Affiliate of Tenant as well as a tax credit investor. Subject to Landlord's prior written approval, which approval may be granted or withheld in Landlord's reasonable discretion, at the time of the creation of such master lease structure, the tax credit investor may request certain changes to this Lease in order to meet its requirements for compliance with federal income tax law and the investor's investment guidelines. Notwithstanding anything to the contrary, any such master lease structure shall have no economic or substantive changes to the rights and responsibilities of Landlord and Tenant.

37.13 Identity of Landlord.

On the Commencement Date, Landlord shall mean the United States of America, acting by and through the Administrator of General Services. After the Commencement Date, "Landlord" shall mean only the fee owner in question of the Land and Improvements so that if the United States of America or any successor fee owner of the Land and Improvements ceases to have any interest in the Land and Improvements by reason of a sale or transfer of the same in accordance with the terms of this Lease, the seller or transferor shall be and hereby is entirely freed and relieved of all agreements, covenants and obligations of Landlord hereunder to be performed after the date of such sale or transfer, provided, that the purchaser or transferee of the Land and Improvements expressly assumes and agrees to carry out any and all agreements, covenants and obligations of Landlord hereunder accruing from and after the date of such sale or transfer. Nothing herein shall relieve Landlord from any liability with respect to agreements, covenants and obligations required to be performed prior to the date of any such sale or transfer of Landlord's Interest. For the avoidance of doubt, Tenant does not own the Premises.

37.14 Identity of Tenant.

On the Commencement Date, Tenant shall mean Trump Old Post Office LLC, a Delaware limited liability company. Thereafter, "Tenant" shall mean the initial Tenant's permitted successors and assigns with respect to all or substantially all of the initial Tenant's interest in and to this Lease. At all times, throughout the Term, including after giving effect to any transfers permitted pursuant to this Lease, (a) none of the funds or other assets of Tenant, Person holding a Controlling interest in Tenant, Operator, the holder of the Leasehold Mortgage or any participants, successors or assigns of the Leasehold Mortgage shall constitute property of, or shall be beneficially owned, directly or indirectly, by any Person subject to trade restrictions under United States law, including, but not limited to, the International Emergency Economic Powers Act, 50 U.S.C. §§ 1701 *et seq.*, The Trading with the Enemy Act, 50 U.S.C. App. 1 *et seq.*, the Uniting and Strengthening America by Providing Appropriate Tools

Required to Intercept and Obstruct Terrorism Act (PATRIOT Act) of 2001 and any Executive Orders or regulations promulgated thereunder, each as may be amended from time to time, with the result that the investment as applicable (whether directly or indirectly), would be prohibited by law (each, an "Embargoed Person"), or this Lease would be in violation of law, (b) no Embargoed Person shall have any direct or indirect interest of any nature whatsoever in Tenant or Operator, as applicable, with the result that the investment in Tenant or Operator, as applicable (whether directly or indirectly), would be prohibited by law or this Lease would be in violation of law, and (c) none of the funds of Tenant or Operator, as applicable, shall be derived from any unlawful activity with the result that the investment in Tenant or Operator, as applicable (whether directly or indirectly), would be prohibited by law or this Lease would be in violation of law.

37.15 Tenant's Representations.

Tenant hereby makes the following representations and warranties, solely for the benefit of Landlord, as of the Commencement Date:

(a) Organization. Tenant is duly organized and validly existing limited liability company in good standing under the laws of the State of Delaware. The limited liability company agreement of Tenant shall contain single purpose entity covenants reasonably acceptable to Landlord (including a requirement to have at least one independent manager) substantially similar to those contained in commercial mortgage loans that are rated by nationally recognized rating agencies. The Organizational Chart provided by Tenant to Landlord upon execution of this Lease is, and any subsequent Organizational Charts provided by Tenant to Landlord shall be, a true and accurate representation of all direct and indirect ownership of Tenant and Operator and sets forth all information required to be displayed in accordance with the definition of Organizational Chart in this Lease. Neither Tenant nor, to Tenant's knowledge, any owner of a direct or indirect interest in Operator (i) is listed on any Government Lists, (ii) is a Person who has been determined by competent authority to be subject to the prohibitions contained in Presidential Executive Order No. 13224 (Sept. 23, 2001) or any other similar prohibitions contained in the rules and regulations of the Office of Foreign Assets Control ("OFAC") or in any enabling legislation or other Presidential Executive Orders in respect thereof, (iii) has been previously indicted for or convicted of any felony involving a crime or crimes of moral turpitude or for any Patriot Act Offense, or (iv) is currently under investigation by any Governmental Authority for alleged criminal activity. For purposes hereof, the term "Patriot Act Offense" means any violation of the criminal laws of the United States of America or of any of the several states, or that would be a criminal violation if committed within the jurisdiction of the United States of America or any of the several states, relating to terrorism or the laundering of monetary instruments, including any offense under (A) the criminal laws against terrorism; (B) the criminal laws against money laundering, (C) the Bank Secrecy Act, as amended, (D) the Money Laundering Control Act of 1986, as amended, or (E) the Patriot Act. "Patriot Act Offense" also includes the crimes of conspiracy to commit, or aiding and abetting another to commit, a Patriot Act Offense. For purposes hereof, the term "Government Lists" means (1) the Specially Designated Nationals and Blocked Persons Lists maintained by OFAC, (2) any other list of terrorists, terrorist organizations or narcotics traffickers maintained pursuant to any of the Rules and Regulations of OFAC that Landlord notified Tenant in writing is now included in "Government Lists", or (3) any similar lists maintained by the United States Department of State, the United States Department of Commerce or any other Government Authority or pursuant to any Executive Order of the President of the United States of America that Landlord notified Tenant in writing is now included in "Government Lists".

(b) Power and Authority. The Persons executing this Lease on behalf of Tenant have the full right, power and authority to execute and deliver this Lease as Tenant's act and deed and to bind Tenant hereto. Tenant has the full right, power and authority, and has obtained all necessary authorizations and consents, to enter into and perform its obligations under this Lease.

(c) Valid and Binding. The Lease is a legal, valid and binding obligation of Tenant, enforceable against Tenant in accordance with its terms.

(d) No Conflict. The execution and delivery of this Lease by Tenant will not result in a breach of the terms or provisions of, or constitute a default (or a condition that, upon notice or lapse of time, or both, would constitute a default) under its organizational documents or any indenture, agreement or obligation by which Tenant, is bound, and will not constitute a violation of any law, order, rule or regulation applicable to Tenant.

(e) No Litigation. No litigation is being threatened or prosecuted against Tenant, DJT or OPO Hotel Manager LLC that might impair Tenant's ability to execute and deliver this Lease or perform any of its obligations hereunder.

(f) Reporting. All statements, reports and other documents delivered by Tenant pursuant to this Lease (including but not limited to Section 5.3) shall be true and accurate in all material respects and fairly present the condition or information required thereby.

37.16 Landlord's Representations.

Landlord hereby makes the following representations and warranties, solely for the benefit of Tenant, as of the Commencement Date:

(a) Power and Authority. Landlord has full power and authority to enter into this Lease on behalf of the United States of America. The Persons executing this Lease on behalf of Landlord have the full right, power and authority to execute and deliver this Lease as Landlord's act and deed and to bind Landlord hereto. Landlord is a valid and existing agency of the United States Federal Government and has full power and authority, and has obtained all necessary authorizations and consents, to enter into and perform its obligations under this Lease.

(b) Valid and Binding. The Lease is a legal, valid and binding obligation of Landlord, enforceable against Landlord in accordance with its terms.

(c) No Conflict. The execution and delivery of this Lease by Landlord will not result in a breach of the terms or provisions of, or constitute a default (or a condition that, upon notice or lapse of time, or both, would constitute a default) under its authorizing or other legislation or regulations, or any agreement or obligation by which Landlord is bound, and will not constitute a violation of any law, order, rule or regulation applicable to Landlord.

(d) No Litigation. No litigation is being threatened or prosecuted against Landlord that might impair Landlord's ability to execute and deliver this Lease of perform any of its obligations hereunder.

(e) IP Rights (Landlord). Landlord has the power and authority to grant Tenant the right to use all of the IP Rights (Landlord).

(f) Real Property Taxes. Landlord pays no Real Property Taxes to the District of Columbia or any other jurisdiction based upon its ownership of the Land and Improvements. For avoidance of doubt, Landlord provides no guaranty or assurance that Real Property Taxes will not be imposed in the future.

(g) Deliveries. To the current, actual knowledge of Kevin Terry, Landlord represents that it has delivered to Tenant all material written reports done by any third party vendor in its

possession within the past two (2) years and the most recent building evaluation report conducted by the GSA (if any).

37.17 No Subordination.

Landlord's fee interest in the Premises and this Lease, as the same may be modified, amended or renewed, shall not be subject or subordinate (a) to any Leasehold Mortgage now or hereafter placed upon Tenant's interest in this Lease, or (b) any other liens or encumbrances hereafter affecting Tenant's interest in this Lease. Nothing in this Section 37.17 shall alter Tenant's right to create a Leasehold Mortgage affecting only Tenant's interest in the Premises and this Lease pursuant to Article 18.

37.18 Excavation and Shoring.

(a) General. Subject to Section 37.18(b), Tenant shall allow Landlord or the District of Columbia, or other governmental or quasi-governmental agency or utility company desiring to excavate an abutting street, to enter the Premises and shore up an intervening wall or foundation during such excavation, provided that Landlord or such other adjoining owner, government agency or utility company shall comply with all Required Permits and Approvals and all Applicable Laws, to the same extent as would be required if the Premises were privately owned and provided that no such activity shall in any way interfere with Tenant's use of the Premises. Subject to Landlord's prior written approval, Landlord may assign to Tenant any and all rights to sue for or recover against the District of Columbia or other governmental or quasi-governmental agency or utility company, or the parties causing such damages, the amounts expended or losses sustained by Tenant because of the provisions of this paragraph, or, if such assignment shall not be permitted by law, Landlord may bring any action in Landlord's name required to enforce such rights for the benefit of Tenant, subject to reimbursement by Tenant for all reasonable costs and expenses thereof, including third-party out-of-pocket attorneys' fees and costs.

(b) Limitation. If Landlord shall excavate on adjoining property which it owns and in so doing shall cause damage to Tenant or the Premises, Landlord shall be responsible to Tenant to pay for such damage and the foregoing provisions of this Section 37.18(b) shall not be construed as a release by Tenant of any separate claim which Tenant may have against Landlord for such damage.

(c) Adjacent Excavation. Tenant agrees that in connection with any excavation of any property abutting, adjoining or otherwise affecting the Improvements, Tenant shall request the owner of the abutting, adjoining or affecting property to take all measures reasonably required in the case of structures of similar age, construction and condition to shore up any intervening of affected wall or foundation of the Improvements during such excavation, but Tenant does not make any representation that the work will not affect the Premises. In addition, the event of such excavation by Tenant, Tenant shall be subject to all responsibilities otherwise applicable to it under this Section 37.18.

(d) Adjacent Premises Access. Landlord shall, subject to Tenant obtaining the requisite security clearance, and upon request by Tenant, permit Tenant to enter the IRS building adjacent to the Premises located at 1111 Constitution Avenue, NW, (the "Adjacent Property") and shore up any intervening wall or foundation during any excavation of the Premises and Landlord shall cooperate and coordinate with Tenant in connection with such entry and work, provided that Tenant shall comply with the Required Permits and Approvals and all Applicable Laws, to the same extent as would be required if such Adjacent Property was privately owned and provided that Tenant shall not interfere with or disrupt the business or operations of the tenants on the Adjacent Property in connection with Tenant's activities pursuant to this Section 37.18(d). Any additional costs for security or security clearances shall be the sole responsibility of Tenant.

37.19 Interested Parties.

No member or delegate to Congress, or elected official of the Government of the United States or the Government of the District of Columbia, shall be admitted to any share or part of this Lease, or to any benefit that may arise therefrom; provided, however, that this provision shall not be construed as extending to any Person who may be a shareholder or other beneficial owner of any publicly held corporation or other entity, if this Lease is for the general benefit of such corporation or other entity.

37.20 Governmental Role of Landlord.

Tenant acknowledges that Landlord, and any successor public agency, in its capacity as a public agency in the pursuit of its legislative mandate, may from time to time promulgate regulations, Historic Preservation Standards and other standards, programs and policies having the force and effect of law of general applicability to property located within those areas of the District of Columbia within its jurisdiction, conduct public hearings or meetings on matters relating to such areas, undertake street widening, street narrowing, relocation of utilities and other public service facilities, repavement of street and sidewalks, landscaping and other public improvements in the vicinity immediately adjacent to the Premises, and generally do all other things permitted or required from time to time by its enabling legislation. Tenant further acknowledges that nothing contained in this Lease shall be construed as to preclude, limit or restrain the foregoing authority of Laudlord and that no actions taken by Landlord pursuant to such authority (except to the extent as expressly provided in this Lease) shall entitle Tenant to any abatements, set-offs, or reductions in the Annual Base Rent, Percentage Rent Difference (if applicable) or any other rights against Landlord (in its capacity as Landlord) under this Lease except as Tenant may be entitled to receive under this Lease and Landlord acknowledges that nothing contained in this Lease shall be construed so as to preclude, limit or restrain Tenant from taking any action to challenge any actions taken by Landlord pursuant to such authority including the rights of Tenant set forth in Article 23.

37.21 Antennae Agreements.

Tenant acknowledges the rights of various governmental authorities ("Government Antennae Tenants") and third party commercial tenants ("Commercial Antennae Tenants") under the antennae agreements listed on **Exhibit M** attached to this Lease as well as future renewals and amendments thereto and new and additional antennae agreements (together, the "Antennae Agreements"). Existing Government Antennae Tenants' antennae equipment will remain on the Premises, shall not be subject to rent payable to Tenant, and shall be managed and maintained by Landlord. Tenant shall not disturb the Government Antennae Tenant's antennae equipment during any phase of construction or otherwise without the Landlord's consent, which shall not be unreasonably withheld, conditioned or delayed. Tenant shall provide alternative temporary structures for such equipment during any such consented disturbance. Landlord shall have the on-going exclusive right to grant governmental authorities the right to place antennas on a designated area at the Premises (the "Landlord Antennae Area") as shown on **Schedule C**, without Tenant's consent (it being understood that any such tenants within the Landlord Antennae Area shall be Government Antennae Tenants). Government Antennae Tenants shall be responsible for payment of their share of utilities (either through sub-metering or allocation). Tenant shall have the right to enter into or amend any antennae and other communication and similar agreements with Commercial Antennae Tenants or Government Antennae Tenants for any portion of the Premises that is not "Landlord Antennae Area", without Landlord's consent upon prior written notice to Landlord. Landlord has certain rights to terminate each of the existing Antennae Agreements with Commercial Antennae Tenants. [redacted]

(b) (4)

(b) (4) As clarification, Tenant will not be due any income from Government Antennae Tenants for antennae equipment placed in Landlord Antennae Area. Any new antenna that is installed by either Tenant (in any area that is not Landlord Antennae Area) or by Landlord (in Landlord Antenna Area) shall not interfere with any then-existing equipment of Commercial Antenna Tenants or Government Antennae Tenants.

37.22 Payment Upon Termination.

Within sixty (60) days (or such longer period as may be expressly provided in this Lease) of any permitted termination of this Lease, each of Landlord and Tenant shall pay the other party any sums that are expressly due and payable under this Lease. For avoidance of doubt, (i) the term "due and payable" shall not include Rent credits that Tenant shall be entitled to and (ii) nothing shall be "due and payable" to Tenant if this Lease is terminated pursuant to an Event of Default by Tenant. This Section 37.22 shall survive the termination of this Lease.

37.23 Equal Employment Opportunity.

(a) General Covenant. Tenant covenants and agrees that it shall neither commit nor permit discrimination or segregation by reason of race, creed, color, religion, national origin, ancestry, sex, age, disability or marital status in the sale, transfer or assignment of its interest under this Lease or in the subleasing, use or occupancy of the Premises or any part thereof including any services, privileges, accommodations, and activities provided in connection therewith, or in connection with the maintenance, repair or replacement of the Improvements and that it shall comply with all applicable federal, state and local laws, ordinances, rules and regulations from time to time in effect prohibiting any such discrimination or segregation. Tenant further agrees to include the foregoing provision in all Major Subleases with respect to the Premises or any portion thereof by amendment thereto if necessary.

(b) Specific Covenant.

(i) If, other than this Lease and the documents related thereto, during any 12-month period (including the 12 months preceding the award of this contract), Tenant (referred to below as the "Contractor") has been or is awarded nonexempt federal contracts and/or subcontracts that have an aggregate value in excess of $10,000, the Contractor shall comply with subparagraph (b)(ii) (1) through (11) below. Upon request, the Contractor shall provide information necessary to determine the applicability of this clause.

(ii) During performing any such contract described above, the Contractor agrees as follows:

(1) The Contractor shall not discriminate against any employee or applicant for employment because of race, color, religion, sex, or national origin. However, it shall not be a violation of this clause for the Contractor to extend a publicly announced preference in employment to Indians living on or near an Indian reservation, in connection with employment opportunities on or near an Indian reservation, as permitted by 41 CFR Part 60-1.5.

(2) The Contractor shall take affirmative action to ensure that applicants are employed, and that employees are treated during employment, without regard to their race, color, religion, sex, or national origin. This shall include (i) employment, (ii) upgrading, (iii) demotion, (iv) layoff or termination, (v) rates of pay or other forms of compensation, and (vi) selection of training, including apprenticeship.

(3) The Contractor shall post in conspicuous places available to the employees and applicants for employment the notices to be provided by Landlord's Contracting Officer that explains this clause.

(4) The Contractor shall, in all solicitations or advertisement for employees place by or on behalf of the Contractor, state that all qualified applicants will receive consideration for employment without regard to race, color, religion, sex, or national origin.

(5) The Contractor shall send, to each labor union or representative of the workers with which it has a collective bargaining agreement or other contract or understanding, the notice to be provided by Landlord's Contracting Officer advising the labor union or workers' representative of the Contractor's commitments under this clause, and post copies of the notice in conspicuous places available to employees and applicants for employment.

(6) The Contractor shall comply with Executive Order 11246, as amended, and the rules, regulations, and order of the Secretary of Labor.

(7) The Contractor shall furnish to the contracting agency all information required by Executive Order 11246, as amended, and by the rules, regulations, and orders of the Secretary of Labor. The Contractor shall also file Standard Form 100 (EEO-1), or any successor form, as prescribed in 41 CFR Part 60-1.

(8) The Contractor shall permit access to its books, records, and accounts by the contracting agency or the OFCCP for the purpose of conducting on-site compliance evaluations and complaint investigation. The Contractor shall permit the Government to inspect and copy any books, accounts, records (including computerized records), and other material that may be relevant to the matter under investigation and pertinent to compliance with Executive Order 11246, as amended, and rules and regulations that implement the Executive Order.

(9) If the OFCCP determines that the Contractor is not in compliance with this clause or any rule, regulation, or order of the Secretary of Labor, this contract may be canceled, terminated, or suspended in whole or in part and the contractor may be declared ineligible for further Government contracts, under the procedures authorized in Executive Order 11246, as amended, the rules, regulations, and orders of the Secretary of Labor, or as otherwise provided by law.

(10) The Contractor shall include the terms and conditions of subparagraph (b)(ii) (1) through (11) of this clause in every subcontract or purchase order that is not exempted by the rules, regulations, or orders of the Secretary of Labor issued under Executive Order 11246, as amended, so that these terms and conditions will be binding upon each subcontractor or vendor.

(11) The Contractor shall take such action with respect to any subcontract or purchase order as the contracting agency may direct as a means of enforcing these terms and conditions, including sanctions for noncompliance; provided, that if the Contractor becomes involved in, or is threatened with, litigation with a subcontractor or vendor as a result of any direction, the Contractor may request the United States to enter into the litigation to protect the interest of the United States.

(c) Disputes. Notwithstanding any other clause in this Lease, disputes relative to this Section 37.23 will be governed by the procedures referenced in 41 CFR Part 60-1.1.

37.24 Pennsylvania Avenue Usage.

Tenant hereby acknowledges the usage limitations with respect to Pennsylvania Avenue during any presidential inauguration period as set forth in 36 C.F.R. 7.96 and as shown on **Exhibit R**, as the foregoing may be amended from time to time. In connection with the presidential inaugural parade or a threat to public safety, Tenant hereby agrees to allow the United States Secret Service to implement security measures on the Premises and Off-Site Areas. These security measures may include, but are not limited to, traffic and pedestrian restrictions, the operation of vehicle and public screening checkpoints, and the establishment of secured areas.

37.25 Davis-Bacon.

Tenant agrees, with respect to any contract entered into by Tenant or Operator during the Term for construction, alteration and/or repair of or to the Premises, that if entered into by the United States would be subject to the Davis-Bacon Act, 40 U.S.C. §§3141 *et seq.*, to require its contractors under such contract to comply with all provisions of the Davis-Bacon Act; the Vietnam Era Veterans Readjustment Act of 1972, 38 U.S.C. §4211; and the Rehabilitation Act of 1973, 29 U.S.C. §705; including all implementing regulations issued thereunder to the same extent as if such contractors had contracted directly with the United States.

37.26 Simultaneous Termination of the Lease, Programmatic Agreement, Memorandum of Understanding (Jurisdiction) and Work Agreement.

Any termination of this Lease shall result in a simultaneous termination of the Work Agreement, the Memorandum of Understanding (Jurisdiction), and the Programmatic Agreement, except for those obligations which expressly survive termination.

37.27 Further Assurances.

Subsequent to the date hereof, the parties shall promptly use diligent and good faith efforts to negotiate, prepare, and execute such further documents ("Further Documents") and do any and all such further things as may be necessary to implement and carry out the intent of this Lease. For the avoidance of doubt, such Further Documents shall include (i) any exhibits or schedules referenced herein but not attached to this Lease; (ii) any documents necessary for obtaining, maintaining or operating a business or liquor license on the Premises; (iii) the Work Agreement; (iv) the Programmatic Agreement; (v) Memorandum of Understanding (Jurisdiction); and (vi) form of sublease.

37.28 No Right to Terminate for Convenience.

Notwithstanding any provision to the contrary, including but not limited to the principle that is commonly referred to as the Christian Doctrine (see *G.L. Christian and Associates v. US*, 375 U.S. 954, 84 S.Ct. 444, 11 L. Ed.2d 314 (1963)), Landlord hereby waives any statutory, regulatory, common law or other legal or equitable right it may have to terminate this Lease for the convenience of the Government, which right is described in FAR Part 49.

37.29 Removal of Title Exceptions.

Prior to Exclusive Possession, Landlord shall cause the title exceptions listed on **Exhibit E-2** to be released of record. In order to timely and accurately effectuate such release, Tenant shall provide draft documents to Landlord no later than ninety (90) days prior to the Planned Delivery Date.

37.30 Rent Credit Interest.

All outstanding Rent credits shall accrue interest, which interest shall be the lesser of (i) seven and one-half percent (7.5%) on an annualized basis and (ii) the maximum rate then permitted under applicable law, in any event, calculated on the basis of actual days elapsed, based on a 365-day year, from the date such Rent credit became effective to (but not including) the date of application of the applicable portion of such Rent credit. Notwithstanding the foregoing, the PDD Credit and the ADD Credit shall not accrue interest.

37.31 Up-Front Payment.

With respect to any provisions of the Lease that require Tenant to reimburse Landlord for certain out-of-pocket expenses to be incurred by Landlord in connection with services to be procured by Landlord in order for Landlord to perform its obligations pursuant to this Lease, Landlord shall have the option to require an up-front payment of such expenses in accordance with this paragraph. Notwithstanding the foregoing, to the extent Tenant shall be responsible for construction manager fees pursuant to the Work Agreement, such fees shall be paid in advance on a bi-monthly basis in accordance with this paragraph. Landlord shall provide Tenant with an estimate reasonably acceptable to Landlord and Tenant for the anticipated costs of such work. Within fifteen (15) days after receipt of such estimate, Tenant shall remit payment to Landlord in the amount of the estimate. In no event shall Landlord be obligated to begin or continue any such work until Tenant tenders payment. Upon receipt of payment from Tenant, Landlord will use its good faith efforts to procure the services in a timely manner in accordance with Applicable Laws. To the extent that the funds provided by Tenant are not sufficient or become insufficient to enable Landlord's contractor to begin performance, continue performance, or finish performance, then Tenant shall, within fifteen (15) days after a written request from Landlord for additional funds, remit such additional payment to Landlord. Within sixty (60) days after Landlord makes final payment to Landlord's contractor, if there remains an excess over that amount payable to Landlord's contractor, Landlord shall provide a Rent credit to Tenant for any such excess.

37.32 Accuracy of Written Reports.

Tenant covenants that all certificates, reports, affidavits, financial statements, and similar written documents submitted by Tenant to Landlord in connection with this Lease will be true, correct, accurate and complete in all material respects.

37.33 Memorandum of Understanding (Jurisdiction).

Landlord shall not amend, waive, supplement, terminate or otherwise modify the Memorandum of Understanding (Jurisdiction) without prior written notice to and consultation with Tenant. Notwithstanding the foregoing, Landlord shall not amend, waive, supplement, terminate, or otherwise modify the Memorandum of Understanding (Jurisdiction) in a way that results in more than one permitting authority for construction or development of the premises.

Landlord agrees that it will make no modifications to the Memorandum of Understanding (Jurisdiction) with the District of Columbia regarding the building permitting responsibilities associated with the construction, development, and operations of the Premises, if at all, until five (5) years from the Delivery Date.

37.34 A&T Lot Applications.

Landlord shall prepare, execute and cause to be filed the following applications: (1) to create new assessment and taxation ("A&T") lots in Square 324 for the portions of the Premises known as the "air rights parcels" (currently assigned theoretical A&T lots numbered 7000, 7001 and 7002), (2) to

create a new A&T lot in Square 324 for the portion of the Premises known as the "Annex/Pavilion" (lot number to be determined), (3) to create a new A&T lot in Square 324 for the portion of the Premises that is south of C Street (lot number to be determined), and (4) to combine the portion of C Street that is a part of the Premises with the existing A&T lot (Square 323, Lot 800) for the building on the Premises known as the "Old Post Office" (lot number to be determined).

After items 1-4 above are completed by Landlord, Landlord shall have no further obligation for any additional A&T lot applications, subdivision applications or any preparation, execution or delivery of any items related to applications with the District of Columbia related to the plat or survey, except as may be necessary as signatory on future documents to be recorded in connection with the last sentence of this paragraph. Following transfer of the parcel shown on **Exhibit P** from NPS to Landlord and inclusion in the Premises, Tenant may elect, at Tenant's sole cost and expense to create a new A&T lot for the parcel. If Tenant elects to submit any applications, plats and additional documentation (1) to create a legal subdivision combining the entire Premises into a single lot of record; and/or (2) to combine all of the A&T lots comprising the Premises into a single A&T lot, then, upon Tenant's reasonable request, Landlord shall execute such applications, plats and additional documentation, at Tenant's sole cost and expense.

[SIGNATURES ON FOLLOWING PAGE]

IN WITNESS WHEREOF, the Landlord and Tenant have executed this Lease as of the day and year first above written.

LANDLORD

UNITED STATES OF AMERICA, acting by and through the Administrator of General Services

By:_____
Name:
Title:

TENANT

TRUMP OLD POST OFFICE LLC,
a Delaware limited liability company

By:_____
Name:
Title:

EXHIBIT A-1

TENANT'S SOFT COST CATEGORIES

Soft Cost Categories	
#	Category
1	Owner Construction Administration and General Conditions
2	Design & Technical Consultants
3	Off Site Mock-up Unit / Construction / Furnishing
4	Surveys
5	Renderings and Presentations
6	Legal and Business Advisors
7	Retail Marketing and Sales
8	Inventory
9	Signage
10	Reimbursables & Travel
11	Information Technology
12	Start-up Costs
13	Financing Costs
14	Insurance
15	Closing & Title Fees
16	Organizational Costs

EXHIBIT A-2

TENANT'S HARD COST CATEGORIES

No.	Items
1	General Requirements
2	Building Demolition
3	Site Preparation
5	Site Utilities
6	Site Improvements
7	Landscaping
8	Deep Foundations
11	Building Concrete
12	Exterior Facade
14	Masonry
15	Structural Steel
16	Ornamental Metal
17	Miscellaneous Metals
18	Carpentry
19	Rough Hardware
20	Interior Finishes / Custom Items
21	Waterproofing
22	Caulking & Sealants
24	Roofing & Sheet Metal
25	Preformed Metal
26	Doors & Frames (Material)
27	Special Doors
28	Finish Hardware (Material)
29	Canopies / Skylight
30	Glass & Glazing
31	Drywall / Interior Finishes
32	Stucco
33	Spray Fireproofing
35	Interior Stone
37	Carpet/Resilient
38	Painting/Wall Covering
39	Specialties
42	Equipment
47	Conveying Systems
48	Plumbing Systems
49	HVAC Systems
50	Fire Protection System
51	Electrical Systems
53	General Liability Insurance
59	Final Cleaning

EXHIBIT B-1

EQUITY GUARANTY

[FOLLOWS THIS COVER PAGE]

GUARANTY

THIS GUARANTY, dated as of _____, 2013 (as may be amended or modified from time to time pursuant to the terms herein, this "**Guaranty**"), is made by [redacted] (b) (4), an individual ("**Guarantor**"), having an address at c/o Trump Organization, 725 Fifth Avenue, New York, New York 10022, in favor of the **UNITED STATES OF AMERICA**, acting by and through the Administrator of General Services ("**Landlord**"), whose address is c/o U.S. General Services Administration, Portfolio Management, Suite 7600, 7th and D Streets, S.W., Room 7660, Washington, D.C., 20407.

RECITALS

WHEREAS, this Guaranty is executed and delivered in connection with that certain Ground Lease, dated as of _____, 2013 (the "**Lease**"), between Landlord and Trump Old Post Office LLC ("**Tenant**"). Unless otherwise defined herein, capitalized terms shall have the meanings set forth in the Lease.

WHEREAS, this Guaranty shall be effective upon Construction Commencement.

NOW THEREFORE, in consideration of the foregoing and for other good and valuable consideration, the receipt and sufficiency of which are hereby acknowledged, Guarantor hereby agrees as follows:

AGREEMENT

1. Guaranteed Obligations.

(a) Subject to all of the terms and conditions of this Guaranty, Guarantor hereby absolutely, irrevocably and unconditionally guarantees to Landlord the payment and performance of the Guaranteed Obligations.

(b) "**Guaranteed Obligations**" means the complete and prompt performance of the following after the expiration of all applicable notice and cure periods under the Lease:

(i) The (x) payment and performance of Tenant's obligations under the Lease and (y) contribution to Tenant of Equity (or payment by Guarantor of Project Costs) of [redacted] (b) (4) (such amount, as reduced from time to time, the "**Guaranty Amount**"). The Guaranty Amount shall be reduced on a dollar-for-dollar basis from time to time by amount of Tenant's Equity contributed to the Project, measured by the actual payment of Project Costs [redacted] (b) (4), which are actually paid by Tenant or Guarantor (and are not funded by the Construction Loan or other Debt). For the avoidance of doubt, if an amount greater than or equal to [redacted] (b) (4) [redacted] (b) (4) is actually paid by Tenant (from Equity contributions to Tenant) or Guarantor toward the Project Costs, the Guaranty Amount shall be reduced to $0 and this Guaranty shall be terminated upon Tenant's delivery to Landlord of

supporting documentation, which documentation Landlord shall have the right to review and confirm.

(ii) Guarantor agrees that, promptly after notice or demand if Guarantor shall be in default under this Guaranty, Guarantor will reimburse Landlord, to the extent that such reimbursement is not made by Tenant, for reasonable third-party out-of-pocket counsel fees and disbursements, actually paid by Landlord in connection with the enforcement of the Guaranteed Obligations or any portion thereof pursuant to the provisions hereof.

(iii) Notwithstanding anything in this Guaranty to the contrary, the maximum liability of Guarantor under this Guaranty shall be the lesser of (x) [redacted] (b) (4) [redacted] and (y) the then applicable Guaranty Amount, as such amount is reduced from time to time in accordance with Section 1(b)(i) above.

2. Representations and Warranties. Guarantor represents and warrants the following as of the date hereof:

(a) Guarantor has full power, authority and legal right to execute and deliver this Guaranty and to perform his obligations hereunder.

(b) This Guaranty is a legal, valid and binding obligation of Guarantor enforceable against Guarantor in accordance with its terms, except as such enforcement may be limited by bankruptcy laws affecting creditor's rights generally in the event of a Bankruptcy Action by or against Guarantor.

(c) The execution, delivery and performance of this Guaranty by Guarantor does not and will not: (i) require any consent or approval by any person or entity which has not been obtained by Guarantor; (ii) contravene any documents governing Guarantor; (iii) violate any provision of, or require any filing, registration, consent or approval under, any law, rule, regulation, order, writ, judgment, injunction, decree, determination or award presently in effect having applicability to Guarantor; (iv) result in a breach of, or constitute a default or require any consent under any agreement or instrument to which Guarantor is a party; or (v) cause Guarantor to be in violation of any law, rule, regulation, order, writ, judgment, injunction, decree, determination or award, or in default under any agreement or instrument to which Guarantor is a party or which is applicable to Guarantor.

[redacted] (b) (4)

(e) Guarantor represents that he derives benefits from the transactions contemplated by the Lease, which benefits render this Guaranty valid and enforceable.

3. Guaranty Amount Report.

Until the Guaranteed Obligations are released or terminated, Guarantor shall submit to Landlord in accordance with Section 6, from time to time and not less frequently than

once every calendar month, a report from an individual authorized by Guarantor (each, a "**Guaranty Amount Report**"), which shall (i) provide an accounting of any Project Costs paid since the date of the immediately preceding Guaranty Amount Report, if any and (ii) provide for the then outstanding Guaranty Amount as of the date of such report.

4. No Limitation of Liability. To the extent permitted by applicable law, Guarantor hereby consents and agrees to each of the following, and agrees that Guarantor's obligations under this Guaranty shall not be released, limited, diminished, impaired, reduced or adversely affected by any of the following, and waives any rights which Guarantor might have otherwise as a result of or in connection with any of the following:

(a) The accuracy or inaccuracy of the representations and warranties made by Tenant under the Lease;

(b) The insolvency, bankruptcy, rearrangement, adjustment, composition, liquidation, disability, dissolution or lack of power of Tenant or any dissolution, consolidation or merger of Tenant, or any sale, lease or transfer of any or all of the assets of Tenant, or any changes in the ownership, members or partners of Tenant;

(c) The taking or accepting of any other security, collateral or guaranty, or other assurance of the payment, for all or any part of the Lease;

(d) The failure of Landlord to exercise or to exhaust any right or remedy or take any action against Tenant or any collateral or other security available to it;

(e) Any dealings or transactions between Landlord and Tenant, whether or not Guarantor shall be a party to or cognizant of the same;

(f) Landlord's consent to any assignment or successive assignments of the Lease by Tenant; or

(g) Any change, restructuring or termination of the legal structure or existence of Tenant.

5. Successors and Assigns; Benefit.

(a) This Guaranty shall be binding upon Guarantor and its successors and assigns. Guarantor may not delegate or assign any of its duties, obligations or liability under this Guaranty without the prior written consent of Landlord.

(b) This Guaranty is for the benefit of Landlord and its respective successors and assigns, and in the event of an assignment by Landlord or its respective successors or assigns, of its interest in the Lease, or any part thereof, in accordance with the provisions of the Lease, the rights and benefits hereunder, to the extent applicable to the rights so assigned, may be transferred with such rights.

6. Notices. Where provision is made herein for notice or other communication to be given in writing, the same shall be given by hand delivery, by mailing a copy of such notice or other communication by certified mail, return receipt requested, or by overnight courier service

addressed to Landlord or to Guarantor at their respective addresses provided at the beginning of this Guaranty, or to any other address that Guarantor shall have provided to Landlord. In addition, in the case of any notice or other communication required or permitted to be given to Guarantor under this Guaranty, an additional copy thereof shall be delivered in accordance with the foregoing to each of Ivanka Trump, Jason D. Greenblatt, Esq., and David Orowitz, c/o The Trump Organization LLC, 725 Fifth Avenue, New York, New York 10022.

7. Termination of Guaranty.

(a) Notwithstanding anything to the contrary contained in this Guaranty, this Guaranty and the obligations of Guarantor hereunder shall terminate and be void upon Tenant's delivery to Landlord of documentation, which documentation the Landlord shall have the right to review and confirm, stating that an amount greater than or equal to the [redacted] (b) (4) has actually been paid by Tenant (from Equity contributions to Tenant) or Guarantor toward the Project Costs (and are not funded by the Construction Loan or other Debt).

(b) This Guaranty and the obligations of Guarantor hereunder shall terminate and be void upon the expiration or sooner termination of the Lease Agreement pursuant to Sections 4.4, 12.4(b), and 23.3 therein.

8. Governing Law. This Guaranty shall be governed by and construed in accordance with the laws of the District of Columbia.

9. **WAIVER OF TRIAL BY JURY**. GUARANTOR HEREBY WAIVES THE RIGHT OF TRIAL BY JURY IN ANY LITIGATION, ACTION OR PROCEEDING ARISING HEREUNDER OR IN CONNECTION THEREWITH.

10. Other Guaranties. The obligations of Guarantor hereunder are separate and distinct from, and in addition to, the obligations of Guarantor now or hereafter arising under any other guaranties, indemnification agreements or other agreements to which Guarantor is now or hereafter becomes a party.

11. Interest; Expenses.

(a) If Guarantor fails to pay all or any sums due hereunder upon demand by Landlord, the amount of such sums payable by Guarantor to Landlord shall bear interest from the date of demand until paid at the Default Rate in effect from time to time.

(b) Guarantor hereby agrees to pay all costs, charges and expenses, including reasonable third-party out-of-pocket attorneys' fees and disbursements that may be incurred by Landlord in enforcing the covenants, agreements, obligations and liabilities of Guarantor under this Guaranty.

12. Severability. If any section, subsection, sentence, clause, phrase or other portion of this Guaranty is, for any reason, declared invalid, in whole or in part, by any court, agency, commission, legislative body or other authority of competent jurisdiction, such portion shall be deemed a separate, distinct and independent portion of this Guaranty, and such declaration shall not affect the validity of the remaining portions hereof, which other portions shall continue in full force and effect.

13. Modification. No termination, amendment, waiver or modification of this Guaranty or any of its terms or provisions shall be effective unless it is set forth in a written instrument signed by Guarantor and the Landlord.

14. Electronic Copies. Delivery of a signature page to this Guaranty by facsimile or as an attachment to an electronic mail message in .pdf, .jpeg, .TIFF or similar electronic format shall be effective as delivery of a manually executed counterpart of this Guaranty for all purposes. Any delivery of a counterpart signature by telecopier or any such electronic format shall, however, be promptly followed by delivery of a manually executed counterpart.

15. No Duty to Pursue Others. This Guaranty is in no way conditioned or contingent upon any attempt by Landlord to enforce its rights against Tenant or to collect from Tenant or upon any other condition or contingency. Accordingly, Landlord shall have the right to proceed against Guarantor immediately pursuant to this Guaranty without taking any prior action or exercising any of Landlord's rights under the Lease. It shall not be necessary for Landlord (and Guarantor hereby waives any rights which Guarantor may have to require Landlord), in order to enforce the obligations of Guarantor hereunder, first to (i) institute suit or exhaust its remedies against any Tenant or others liable on the Lease or the Guaranteed Obligations, or any other Person, if any, (ii) enforce Landlord's rights against any other guarantors of the Guaranteed Obligations, (iii) join Tenant or any other party in any action seeking to enforce this Guaranty, or (iv) resort to any other means of obtaining payment of the Guaranteed Obligations. Landlord shall not be required to mitigate damages or take any other action to reduce, collect, or enforce the Guaranteed Obligations.

[REMAINDER OF THIS PAGE INTENTIONALLY LEFT BLANK]

IN WITNESS WHEREOF, Guarantor has executed and delivered this Guaranty as of the date first above written.

GUARANTOR:

[redacted]

STATE OF NEW YORK)
) ss.
COUNTY OF NEW YORK)

On the day of _____ in the year 2013, before me, the undersigned personally appeared [redacted], personally known to me or proved to me on the basis of satisfactory evidence to be the individual(s) whose name(s) is (are) subscribed to the within instrument and acknowledged to me that he/she/they executed the same in his/her/their capacity(ies), and that by his/her their signature(s) on the instrument, the individual(s), or the person upon behalf of which the individual(s) acted, executed the instrument.

_____
Signature and Office of individual
taking acknowledgment

Accepted and Agreed To:

THE UNITED STATES OF AMERICA, acting by and through the Administrator of General Services

By: _____
Name:
Title:

EXHIBIT B-2

BAD ACTS GUARANTY

[FOLLOWS THIS COVER PAGE]

EXHIBIT B-2

BAD ACTS GUARANTY

GUARANTY

THIS GUARANTY, dated as of _____, 2013 (as may be amended or modified from time to time pursuant to the terms herein, this "**Guaranty**"), is made by [redacted] (b) (4), an individual ("**Guarantor**"), having an address at c/o Trump Organization, 725 Fifth Avenue, New York, New York 10022, in favor of the **UNITED STATES OF AMERICA**, acting by and through the Administrator of General Services ("**Landlord**"), whose address is c/o U.S. General Services Administration, Portfolio Management, Suite 7600, 7th and D Streets, S.W., Room 7660, Washington, D.C., 20407.

RECITALS

WHEREAS, this Guaranty is executed and delivered in connection with that certain Ground Lease, dated as of _____, 2013 (the "**Lease**"), between Landlord and Trump Old Post Office LLC ("**Tenant**"). Unless otherwise defined herein, capitalized terms shall have the meanings set forth in the Lease.

NOW THEREFORE, in consideration of the foregoing and for other good and valuable consideration, the receipt and sufficiency of which are hereby acknowledged, Guarantor hereby agrees as follows:

AGREEMENT

1. (A) Guaranteed Obligations. The term "**Guaranteed Obligations**" shall mean:

(a) Any Guaranteed Losses incurred by Landlord in each case, arising out of or in connection with the following ("**Events**"):

i. fraud, willful material misrepresentation or intentional failure to disclose a material fact by or on behalf of Tenant or Guarantor in connection with the Lease, including by reason of any prohibited conduct under the Racketeer Influenced and Corrupt Organizations Act (RICO);

ii. the conduct of criminal activity by Tenant or Guarantor or any of their respective Affiliates in connection with the Premises or Off-Site Areas;

iii. intentional physical waste of the Premises or Off-Site Areas or any material portion thereof by Tenant other than in furtherance of the Project in accordance with the Work Agreement, or after an Event

of Default under the Lease the removal or disposal of any of the Tenant's Property that is prohibited by the Lease from being removed or disposed of;

iv. any proceeds paid by reason of any insured casualty or any award received in connection with an Appropriation or other sums or payments attributable to the Premises not applied in accordance with the provisions of the Lease;

v. subject to Section 11.5 of the Lease, the failure to pay when due Taxes that accrue during the period before Substantial Completion; or

vi. if Guarantor, Tenant or any Affiliate of any of the foregoing, in connection with any enforcement action or exercise or assertion of any right or remedy by or on behalf of Landlord under or in connection with the Lease, opposes any Landlord enforcement action or exercise of remedies, seeks to interpose any defense or counterclaim or makes a similar request for legal or equitable relief, and in any such case, a court of competent jurisdiction denies, overrules, rejects or finds to be without merit all such opposition, defense, counterclaim or request for relief; and

(b) Any Guaranteed Completion Costs (as defined below) in the event that one or more of the following occurs (each, a "**Springing Recourse Event**"):

i. the filing by Tenant of a voluntary petition under the Bankruptcy Code or a petition for bankruptcy, reorganization or similar proceeding pursuant to any other Federal or state bankruptcy, insolvency or similar law;

ii. the filing of an involuntary petition against Tenant under the Bankruptcy Code or an involuntary petition for bankruptcy, reorganization or similar proceeding pursuant to any other Federal or state bankruptcy, insolvency or similar law, or a request for the appointment of a trustee, receiver, custodian or examiner, by any other Person or Persons, in all cases where Tenant, Guarantor, or any Affiliate, officer or director thereof, colludes with or otherwise cooperates (as those terms are defined below) with such Person or Persons; or

iii. Tenant makes an assignment for the benefit of creditors.

Notwithstanding anything in this Section 1(A)(b) to the contrary, the events listed in Section 1(A)(b) shall each not be deemed to constitute or result in a Springing Recourse Event as long as (x) the Lease is otherwise in full force and effect and all defaults under the Lease and pecuniary losses (including Landlord's reasonable third-party out-of-pocket attorneys' fees) have been cured or (y) the Lease is assumed under Section 365 of the Bankruptcy Code (provided that

if the Lease is proposed to be assigned, any assignment of the Lease is in compliance with the terms of the Lease), and all defaults under the Lease and pecuniary losses (including Landlord's reasonable third-party out-of-pocket attorneys' fees) have been cured.

(B) Guaranteed Losses. The term "**Guaranteed Losses**" shall mean: actual out-of-pocket losses, expenses, costs, liabilities, claims and damages incurred by Landlord resulting directly from the Event in question (including third-party out-of-pocket attorneys' fees and costs reasonably incurred), provided, however, in the case of an event under Section 1(A)(a)(vi), Guaranteed Losses shall mean only third-party out-of-pocket reasonable attorneys' fees and costs. Guaranteed Losses shall not include: (1) Rent or (2) costs and expenses to complete the Project.

(C) Collusive Agreement. The terms "colludes" and "cooperates" shall each mean that a written or oral agreement or understanding (the "**Collusive Agreement**") exists between (1) the Tenant, Guarantor, or any Affiliate, officer or director thereof, and (2) the filer or filers of an involuntary petition or request of the type identified in Section 1(A)(b)(ii), pursuant to which the parties agree to collude or cooperate in the filing of an involuntary petition or request, or in creating the factual circumstances for purposes of supporting court approval of any such filing or request. In the absence of a Collusive Agreement, a Springing Recourse Event shall not exist pursuant to Section 1(A)(b)(ii).

(D) Guaranteed Completion Costs. The term "**Guaranteed Completion Costs**" shall mean any and all costs, expenses and liabilities in respect of the Project incurred by Landlord, including, without limitation, all costs and expenses and discharge of all liabilities with respect to (i) the construction, equipping, permitting, and completion of the Project in accordance with the terms and conditions of the Work Agreement and the Lease, and (ii) the removal of any and all liens and satisfaction or settlement of all claims which (x) arose on or prior to the Springing Recourse Event and (y) are for costs incurred for the Project, and (iii) any and all third-party out-of-pocket attorney's fees and costs reasonably incurred by Landlord in connection therewith.

2. Guaranty.

Subject to Section 8 herein, (i) Guarantor hereby irrevocably, absolutely and unconditionally guarantees to Landlord the full, prompt and complete payment when due of the Guaranteed Obligations, and (ii) all sums payable to Landlord under this Guaranty shall be payable on demand and without reduction for any offset, claim, counterclaim or defense.

3. Representations and Warranties. Guarantor represents and warrants the following as of the date hereof:

(a) Guarantor has full power, authority and legal right to execute and deliver this Guaranty and to perform his obligations hereunder.

(b) This Guaranty is a legal, valid and binding obligation of Guarantor enforceable against Guarantor in accordance with its terms, except as such enforcement may be limited by bankruptcy laws affecting creditor's rights generally in the event of a Bankruptcy Action by or against Guarantor.

(c) The execution, delivery and performance of this Guaranty by Guarantor does not and will not: (i) require any consent or approval by any person or entity which has not been obtained by Guarantor; (ii) contravene any documents governing Guarantor; (iii) violate any provision of, or require any filing, registration, consent or approval under, any law, rule, regulation, order, writ, judgment, injunction, decree, determination or award presently in effect having applicability to Guarantor; (iv) result in a breach of, or constitute a default or require any consent under any agreement or instrument to which Guarantor is a party; or (v) cause Guarantor to be in violation of any law, rule, regulation, order, writ, judgment, injunction, decree, determination or award, or in default under any agreement or instrument to which Guarantor is a party or which is applicable to Guarantor.

(d) As of the date hereof and every six (6) months thereafter while this Guaranty is in effect, Guarantor shall provide to Landlord a certificate executed by Guarantor certifying that: Guarantor's financial condition has not significantly changed from that financial condition evidenced in the Proposal of Trump Old Post Office, LLC (dated July 20, 2011) in Response to Request for Proposal, U.S. General Services Administration, Redevelopment of the Old Post Office Building, Washington, D.C., Trump International Hotel, Old Post Office Building, Washington, D.C.

(e) Guarantor represents that he derives benefits from the transactions contemplated by the Lease, which benefits render this Guaranty valid and enforceable.

4. Covenants.

(a) As used in this Section 4, the following terms shall have the respective meanings set forth below:

i. "**GAAP**" shall mean generally accepted accounting principles, consistently applied.

ii. "**Liquid Assets**" shall mean assets in the form of cash, cash equivalents, obligations of (or fully guaranteed as to principal and interest by) the United States or any agency or instrumentality thereof (provided the full faith and credit of the United States supports such obligation or guarantee), certificates of deposit issued by a commercial bank having net assets of not less than $500 million, securities listed and traded on a recognized stock exchange, medium and long-term securities rated investment grade by one of Moody's Investors Services, Inc. or Standard & Poor's Rating Services, or liquid debt instruments that have a readily ascertainable value and are regularly traded in a recognized financial market.

iii. "**Net Worth**" shall mean, as of a given date, (x) the total assets of Guarantor as of such date less (y) Guarantor's total liabilities as of such date, as determined in accordance with GAAP.

(b) Until the termination of this Guaranty, Guarantor (i) shall maintain (A) a Net Worth in excess of [redacted] (b) (4) (the "**Net Worth Threshold**") and (B) Liquid Assets having a market value of at least [redacted] (b) (4) (the "**Liquid Assets Threshold**") and (ii) shall not sell, pledge, mortgage or otherwise transfer any of

its assets, or any interest therein, which would cause Guarantor's Net Worth to fall below the Net Worth Threshold or Guarantor's Liquid Assets to fall below the Liquid Assets Threshold.

(c) Guarantor shall not, at any time while a default in the payment of the Guaranteed Obligations has occurred and is continuing, either (i) enter into or effectuate any transaction with any Affiliate which would reduce the Net Worth of Guarantor (including the payment of any dividend or distribution to a shareholder, or the redemption, retirement, purchase or other acquisition for consideration of any stock or interest in Guarantor) or (ii) sell, pledge, mortgage or otherwise transfer to any Person any of Guarantor's assets, or any interest therein.

5. No Limitation of Liability. To the extent permitted by applicable law, Guarantor hereby consents and agrees to each of the following, and agrees that Guarantor's obligations under this Guaranty shall not be released, limited, diminished, impaired, reduced or adversely affected by any of the following, and waives any rights which Guarantor might have otherwise as a result of or in connection with any of the following:

(a) The accuracy or inaccuracy of the representations and warranties made by Tenant under the Lease;

(b) The insolvency, bankruptcy, rearrangement, adjustment, composition, liquidation, disability, dissolution or lack of power of Tenant or any dissolution, consolidation or merger of Tenant, or any sale, lease or transfer of any or all of the assets of Tenant, or any changes in the ownership, members or partners of Tenant;

(c) The taking or accepting of any other security, collateral or guaranty, or other assurance of the payment, for all or any part of the Lease;

(d) The failure of Landlord to exercise or to exhaust any right or remedy or take any action against Tenant or any collateral or other security available to it;

(e) Any dealings or transactions between Landlord and Tenant, whether or not Guarantor shall be a party to or cognizant of the same;

(f) Landlord's consent to any assignment or successive assignments of the Lease by Tenant; or

(g) Any change, restructuring or termination of the legal structure or existence of Tenant.

6. Successors and Assigns; Benefit.

(a) This Guaranty shall be binding upon Guarantor and its successors and assigns. Guarantor may not delegate or assign any of its duties, obligations or liability under this Guaranty without the prior written consent of Landlord.

(b) This Guaranty is for the benefit of Landlord and its respective successors and assigns, and in the event of an assignment by Landlord or its respective successors or assigns, of its interest in the Lease, or any part thereof, in accordance with the provisions of the

Lease, the rights and benefits hereunder, to the extent applicable to the rights so assigned, may be transferred with such rights.

7. Notices. Where provision is made herein for notice or other communication to be given in writing, the same shall be given by hand delivery, by mailing a copy of such notice or other communication by certified mail, return receipt requested, or by overnight courier service addressed to Landlord or to Guarantor at their respective addresses provided at the beginning of this Guaranty, or to any other address that Guarantor shall have provided to Landlord. In addition, in the case of any notice or other communication required or permitted to be given to Guarantor under this Guaranty, an additional copy thereof shall be delivered in accordance with the foregoing to each of Ivanka Trump, Jason D. Greenblatt, Esq., and David Orowitz, c/o The Trump Organization LLC, 725 Fifth Avenue, New York, New York 10022.

8. Termination of Guaranty.

(a) Notwithstanding anything to the contrary contained in this Guaranty, this Guaranty and the obligations of Guarantor hereunder shall terminate upon the date of Substantial Completion.

(b) This Guaranty and the obligations of Guarantor hereunder shall terminate and be void upon the expiration or sooner termination of the Lease pursuant to Sections 4.4, 12.4, and 23.3 therein.

9. Governing Law. This Guaranty shall be governed by and construed in accordance with the laws of the District of Columbia.

10. **WAIVER OF TRIAL BY JURY**. GUARANTOR HEREBY WAIVES THE RIGHT OF TRIAL BY JURY IN ANY LITIGATION, ACTION OR PROCEEDING ARISING HEREUNDER OR IN CONNECTION THEREWITH.

11. Other Guaranties. The obligations of Guarantor hereunder are separate and distinct from, and in addition to, the obligations of Guarantor now or hereafter arising under any other guaranties, indemnification agreements or other agreements to which Guarantor is now or hereafter becomes a party.

12. Interest; Expenses.

(a) If Guarantor fails to pay all or any sums due hereunder upon demand by Landlord, the amount of such sums payable by Guarantor to Landlord shall bear interest from the date of demand until paid at the Default Rate in effect from time to time.

(b) Guarantor hereby agrees to pay all costs, charges and expenses, including reasonable third-party out-of-pocket attorneys' fees and disbursements that may be incurred by Landlord in enforcing the covenants, agreements, obligations and liabilities of Guarantor under this Guaranty.

13. Severability. If any section, subsection, sentence, clause, phrase or other portion of this Guaranty is, for any reason, declared invalid, in whole or in part, by any court, agency,

commission, legislative body or other authority of competent jurisdiction, such portion shall be deemed a separate, distinct and independent portion of this Guaranty, and such declaration shall not affect the validity of the remaining portions hereof, which other portions shall continue in full force and effect.

14. Modification. No termination, amendment, waiver or modification of this Guaranty or any of its terms or provisions shall be effective unless it is set forth in a written instrument signed by Guarantor and the Landlord.

15. Electronic Copies. Delivery of a signature page to this Guaranty by facsimile or as an attachment to an electronic mail message in .pdf, .jpeg, .TIFF or similar electronic format shall be effective as delivery of a manually executed counterpart of this Guaranty for all purposes. Any delivery of a counterpart signature by telecopier or any such electronic format shall, however, be promptly followed by delivery of a manually executed counterpart.

16. Marshalling. This Guaranty is in no way conditioned or contingent upon any attempt by Landlord to enforce its rights against Tenant or to collect from Tenant or upon any other condition or contingency. Accordingly, Landlord shall have the right to proceed against Guarantor immediately upon any Event or Springing Recourse Event without taking any prior action or exercising any of Landlord's rights under the Lease. It shall not be necessary for Landlord (and Guarantor hereby waives any rights which Guarantor may have to require Landlord), in order to enforce the obligations of Guarantor hereunder, first to (i) institute suit or exhaust its remedies against any Tenant or others liable on the Lease or the Guaranteed Losses, Guaranteed Completion Costs, or any other Person, if any, (ii) enforce Landlord's rights against any other guarantors of the Guaranteed Losses or Guaranteed Completion Costs,(iii) join Tenant or any other party in any action seeking to enforce this Guaranty, or (iv) resort to any other means of obtaining payment of the Guaranteed Losses or Guaranteed Completion Costs. Landlord shall not be required to mitigate damages or take any other action to reduce, collect, or enforce the Guaranteed Losses or Guaranteed Completion Costs.

[REMAINDER OF THIS PAGE INTENTIONALLY LEFT BLANK]

IN WITNESS WHEREOF, Guarantor has executed and delivered this Guaranty as of the date first above written.

GUARANTOR:

[redacted] (b) (4)

STATE OF NEW YORK)
) ss.
COUNTY OF NEW YORK)

On the day of _____ in the year 2013, before me, the undersigned personally appeared [redacted] (b) (4), personally known to me or proved to me on the basis of satisfactory evidence to be the individual(s) whose name(s) is (are) subscribed to the within instrument and acknowledged to me that he/she/they executed the same in his/her/their capacity(ies), and that by his/her their signature(s) on the instrument, the individual(s), or the person upon behalf of which the individual(s) acted, executed the instrument.

_____
Signature and Office of individual
taking acknowledgment

Accepted and Agreed To:

THE UNITED STATES OF AMERICA, acting by and through the Administrator of General Services

By: _____
Name:
Title:

EXHIBIT C

CLOCK TOWER SPACE

[FOLLOWS THIS COVER PAGE]

OFO Ground Level

* preliminary drawings - may need to be adjusted upon completion of design and permitting

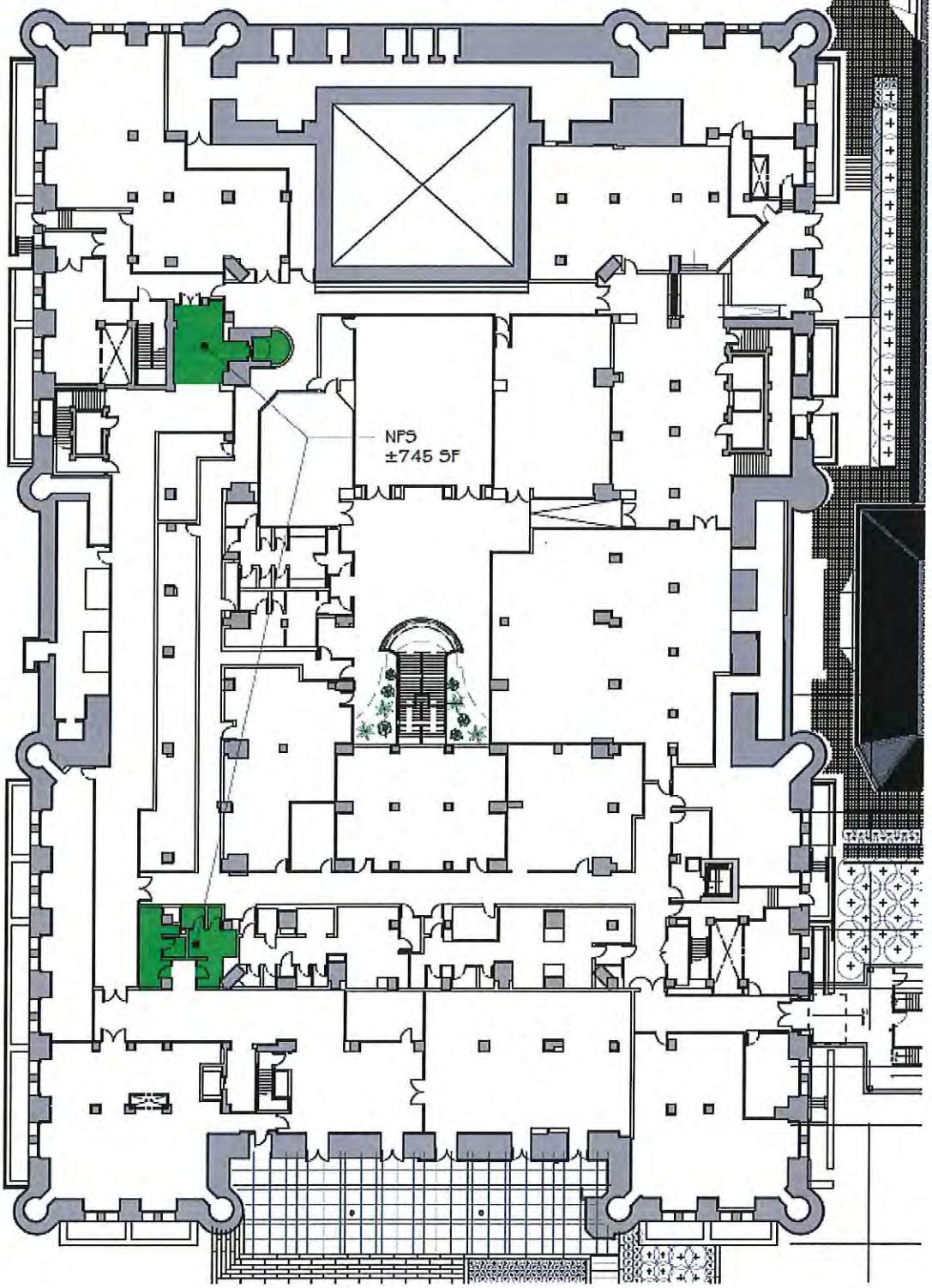

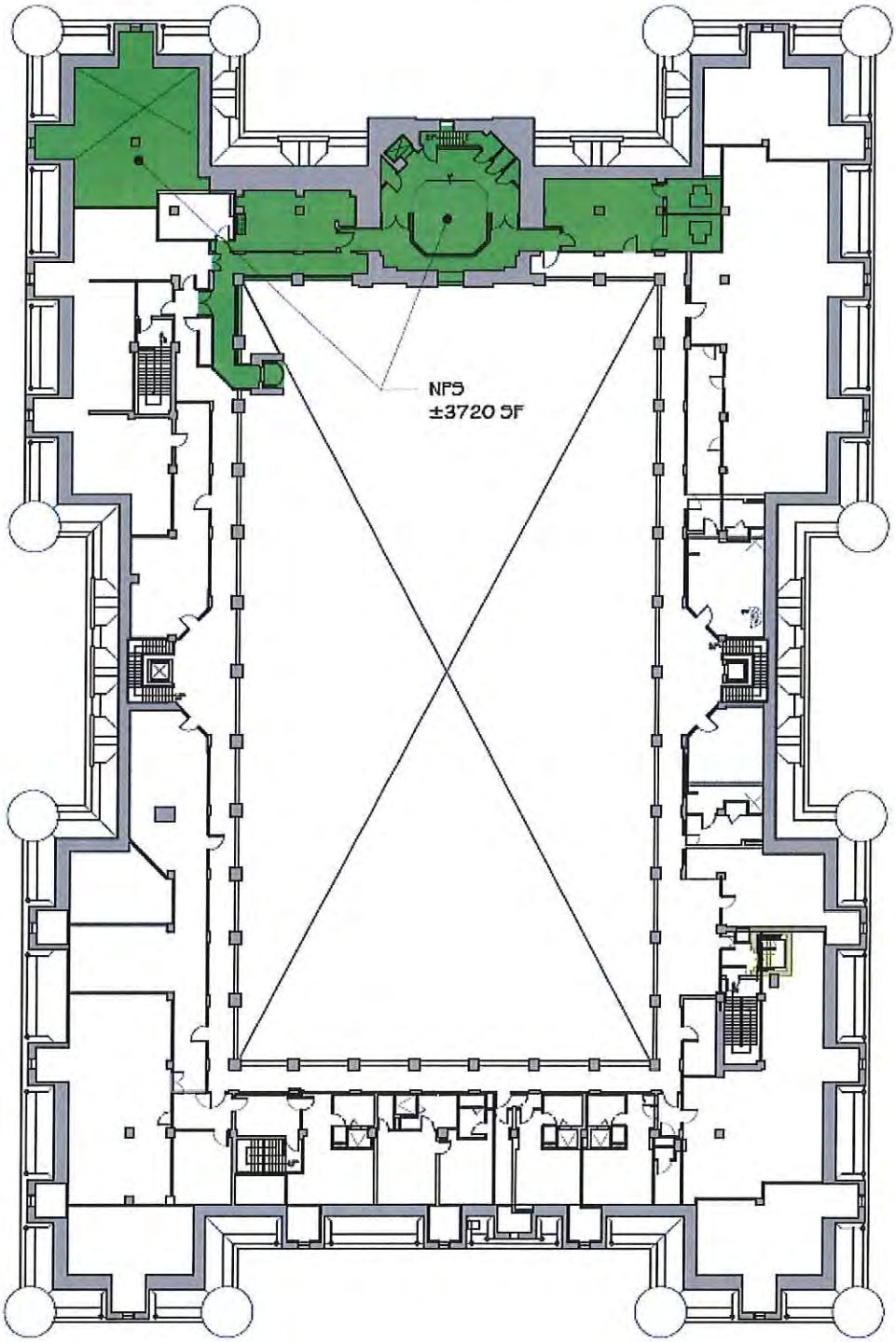
NFS
±3720 SF

* preliminary drawings - may need to be adjusted upon completion of design and permitting

OFO Tenth Floor (Congressional Bells)

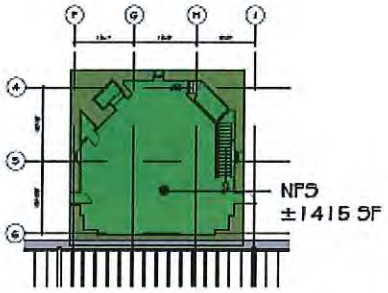

OFO Twelfth Floor (Observation Deck)

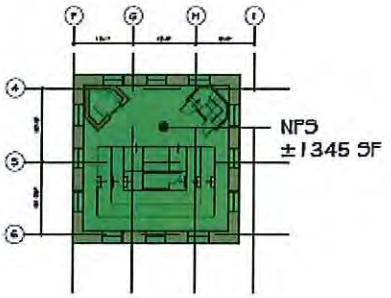

SF Calculations:

1. Ground Floor: ±745 SF
2. Ninth Floor: ±3720 SF
3. Tenth Floor (Congressional Bells): ±1415 SF
4. Twelfth Floor (Observation Deck): ±1345 SF
5. Elevator Machine Room: ±150 SF

OFO Thirteenth Floor (Communications Room)

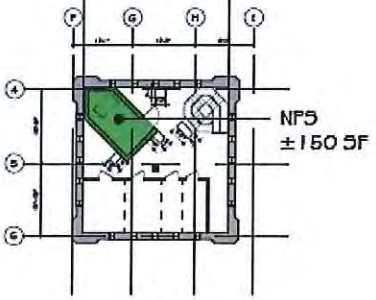

EXHIBIT D

LEGAL DESCRIPTION OF LAND

[FOLLOWS THIS COVER PAGE]

LEGAL DESCRIPTION – PART A
A&T LOT 800 - SQUARE 323
PART OF A&T LOT 806 - SQUARE 324
PART OF C STREET, N.W. CLOSED

Being all of Assessment and Taxation (A&T) Lot 800 in Square 323 as shown on A & T Tracing 323, and part of C Street, N.W. closed as shown on a Plat of Subdivision recorded July 2, 2013 and revised July 19, 2013 in Subdivision Book 207 at Page 138, both on file in the Office of the Surveyor of the District of Columbia and part of A&T Lot 806 in Square 324 as assigned by the District of Columbia Office of Tax and Revenue on June 12, 2013; all being more particularly described as follows in the meridian of the District of Columbia Surveyor's Office:

Beginning at a point at the northwest corner of Square 323 as shown in Original Record of Squares Book 2 at Page 323 recorded in the said Records of the Office of the Surveyor, said point also being at the intersection of the easterly line of 12th Street, N.W. (85 feet wide) and the southerly line of D Street, N.W. (70 feet wide), said point also being the northwest corner of said A&T Lot 800; thence binding on and running with said southerly line of D Street, N.W., the northerly line of Square 323 and the northerly line of A&T Lot 800

1) Due East, 200.17 feet (record and survey) to a point at the northeast corner of Square 323, said point also being the northwest corner of said A&T Lot 806 in Square 324; thence leaving Square 323 and binding on and running with the southerly line of Pennsylvania Avenue, N.W. (160 feet wide), the northerly line of 11th Street, N.W. closed as shown on a Plat of Subdivision recorded in Subdivision Book 99 at Page 130 among the said Records of the Office of the Surveyor and the northerly line of said A&T Lot 806

2) South 70° 16' 17" East, 103.56 feet (record and survey) to a point; thence running at a right angle to Pennsylvania Avenue, N.W. and being collinear with the northwesterly line of a granite wall enclosing an areaway of the adjacent Internal Revenue Service (IRS) building located at 1100 Constitution Avenue, N.W. and also running in, through, over and across said 11th Street, N.W. closed the following fifteen (15) courses and distances

3) South 19° 43' 43" West, 14.82 feet (record and survey) to a point; thence running parallel to and approximately 0.17 feet off of the water table of said IRS building the following six (6) courses and distances

4) North 70° 58' 55" West, 3.66 feet (record and survey) to a point; thence

5) South 19° 01' 05" West, 10.11 feet (record and survey) to a point; thence

6) North 89° 56' 18" West, 18.61 feet (record and survey) to a point; thence

7) South 00° 03' 42" West, 20.17 feet (record and survey) to a point; thence

8) North 89° 56' 18" West, 1.53 feet (record and survey) to a point; thence

9) South 00° 03' 42" West, 15.94 feet (record and survey) to a point; thence running with the base of a granite wall at a western entrance to said IRS building

10) North 89° 56' 18" West, 5.40 feet (record and survey) to a point; thence running through granite walls and parallel to said IRS building

11) South 00° 03' 42" West, 20.46 feet (record and survey) to a point; thence running with the base of a granite wall at a western entrance to said IRS building

12) South 89° 56' 18" East, 5.40 feet (record and survey) to a point; thence running parallel to and approximately 0.17 feet off of the water table of said IRS building the following six (6) courses and distances

13) South 00° 03' 42" West, 15.83 feet (record and survey) to a point; thence

14) South 89° 56' 18" East, 1.53 feet (record and survey) to a point; thence

15) South 00° 03' 42" West, 20.10 feet (record and survey) to a point; thence

16) South 89° 56' 18" East, 1.87 feet (record and survey) to a point; thence

17) South 00° 03' 42" West, 5.20 feet (record and survey) to a point; thence

18) South 84° 35' 30" East, 143.96 feet (record and survey) to a point, crossing the east line of said 11th Street, N.W. closed and the west line of former Square 349 as shown in Original Record of Squares Book 2 at Page 349 recorded in the said Records of the Office of the Surveyor at a distance of 42.73 feet (record and survey) from the beginning of this course; thence binding on and running with on the water table of said IRS building

19) South 00° 10' 31" West, 208.35 feet (record and survey) to a point, crossing the south line of said former Square 349 and the north line of C Street, N.W. closed per said Plat of Subdivision recorded in Subdivision Book 99 at Page 130 at a distance of 69.94 feet (record and survey) from the end of this

course; thence running parallel to and approximately 0.5 feet north of the north face of said IRS building

20) North 89° 49' 29" West, 155.24 feet (record and survey) to a point intersecting the granite wall surrounding the areaway for the IRS building; thence running with the outside face of the granite wall the following three (3) courses and distances

21) North 00° 10' 31" East, 6.00 feet (record and survey) to a point; thence

22) North 89° 49' 29" West, 76.57 feet (record and survey) to a point, crossing the west line of said A&T Lot 806 in Square 324, the west line of said C Street, N.W. closed per said Subdivision Book 99 at Page 130 and the east line of C Street, N.W. closed as shown on a Plat of Subdivision recorded in Subdivision Book 207 at Page 138 at a distance 20.22 feet (record and survey) from the end of this course; thence

23) South 00° 10' 31" West, 6.00 feet (record and survey) to a point; thence running parallel to and approximately 0.5 feet north of the north face of said IRS building

24) North 89° 49' 29" West, 48.47 feet (record and survey) to a point intersecting a granite wall; thence running with the outside face of the granite wall the following three (3) courses and distances

25) North 00° 10' 31" East, 10.87 feet (record and survey) to a point; thence

26) North 89° 49' 29" West, 1.18 feet (record and survey) to a point; thence

27) South 00° 10' 31" West, 0.32 feet (record and survey) to a point; thence binding on and running with the edge of the bottom granite step the following two (2) courses and distances

28) North 89° 49' 29" West, 29.54 feet (record and survey) to a point; thence

29) 9.49 feet along the arc of a curve to the left having a radius of 8.92 feet, a delta angle of 60° 58' 13" and a chord bearing and distance of South 59° 41' 25" West, 9.05 feet (record and survey) to a point; thence running with the face of the building column the following two (2) courses and distances

30) North 53° 37' 37" West, 1.73 feet (record and survey) to a point; thence

31) South 36° 22' 23" West, 1.48 feet (record and survey) to a point; thence running with and binding on the edge of a granite border the following five (5) courses and distances

32) North 53° 37' 37" West, 2.18 feet (record and survey) to a point; thence

33) 87.61 feet along the arc of a curve to the right having a radius of 183.50 feet, a delta angle of 27° 21' 15" and a chord bearing and distance of South 50° 15' 14" West, 86.78 feet (record and survey) to a point, crossing the south line of said C Street, N.W. closed per said Subdivision Book 207 at Page 138, the former northerly line of Square 324 as shown in Original Record of Squares Book 2 at Page 324 and a north line of said A&T Lot 806 in Square 324 at a distance 23.77 feet (record and survey) along said arc from the beginning of this course; thence

34) North 42° 36' 13" West, 0.98 feet (record and survey) to a point; thence

35) 6.39 feet along the arc of a curve to the left having a radius of 5.14 feet, a delta angle of 71° 17' 25" and a chord bearing and distance of North 78° 14' 55" West, 5.99 feet (record and survey) to a point; thence

36) 16.87 feet along the arc of a curve to the right having a radius of 204.33 feet, a delta angle of 4° 43' 52" and a chord bearing and distance of South 68° 28' 18" West, 16.87 feet (record and survey) to a point on the said east line of 12th Street, N.W.; thence running with and binding on said east line the following three (3) courses and distances

37) Due North, 41.61 feet (record and survey) to a point on the southwest corner of said C Street, N.W. closed as shown in said Subdivision Book 207 at Page 138; thence running with and binding on the west line of said C Street, N.W. closed

38) Due North, 80.00 feet (record and survey) to a point on the northwest corner of said C Street, N.W. closed and the southwest corner of said Square 323; thence running with and binding on the west line of said Square 323 and the west line of said A&T Lot 800

39) Due North, 306.92 feet (record and survey) to the Point of Beginning.

Containing an area for Part A of 133,249 square feet or 3.05898 acres of land (record and survey), more or less.

NOTE: As of the date of certification, the land herein described (the "Land") is designated among the Records of the Assessor of the District of Columbia, for

assessment and taxation purposes, as Lot 800 and an A&T Lot as yet undesignated for a portion of C Street, NW closed per Subdivision Book 207 at Page 138 in Square 323 and Lot 806 in Square 324. In contemplation of future combinations or reconfiguration of the Land and subsequent assignment of A&T lot numbers, the Land will be known by those subsequently assigned A&T Lots.

LEGAL DESCRIPTION
AIR RIGHT LOTS 7000, 7001 & 7002 - SQUARE 324

Being 3 strips or parcels of land hereinafter described as being surrounded by and adjacent to Assessment and Taxation (A&T) Lot 806 in Square 324 as assigned by the District of Columbia Office of Tax and Revenue on June 12, 2013 and being more particularly described in the meridian of the District of Columbia Surveyor's Office as follows:

Air Right Lot 7000

Beginning at a point on the water table of the westerly face of the Internal Revenue Service (IRS) building located at 1100 Constitution Avenue, N.W., said point lying 231.57 feet Due South and 412.18 feet Due East from the northwest corner of Square 323, said corner also being at the intersection of the east line of 12th Street, N.W. (85 ft. wide) and the south line of D Street, N.W. (70 ft. wide), thence binding on and running with said A&T Lot 806 the following four (4) courses and distances

1) South 89° 49' 29" East, 7.15 feet to a point; thence

2) South 00° 10' 31" West, 12.66 feet to a point; thence

3) North 89° 49' 29" West, 7.15 feet to a point on said water table of the IRS building; thence running with the water table along the face of said IRS building

4) North 00° 10' 31" East, 12.66 feet to the Point of Beginning:

Containing 91 square feet or 0.00209 of an acre of land.

Air Right Lot 7001

Beginning at a point on the water table of the westerly face of the Internal Revenue Service (IRS) building located at 1100 Constitution Avenue, N.W., said point lying 251.58 feet Due South and 412.12 feet Due East from the northwest corner of Square 323, said corner also being at the intersection of the east line of 12th Street, N.W. (85 ft. wide) and the south line of D Street, N.W. (70 ft. wide), thence binding on and running with said A&T Lot 806 the following four (4) courses and distances

1) South 89° 49' 29" East, 7.15 feet to a point; thence

2) South 00° 10' 31" West, 12.65 feet to a point; thence

3) North 89° 49' 29" West, 7.15 feet to a point on said water table of the IRS building; thence running with the water table along the face of said IRS building

4) North 00° 10' 31" East, 12.65 feet to the Point of Beginning:

Containing 90 square feet or 0.00207 of an acre of land.

Air Right Lot 7002

Beginning at a point on the water table of the westerly face of the Internal Revenue Service (IRS) building located at 1100 Constitution Avenue, N.W., said point lying 271.59 feet Due South and 412.06 feet Due East from the northwest corner of Square 323, said corner also being at the intersection of the east line of 12th Street, N.W. (85 ft. wide) and the south line of D Street, N.W. (70 ft. wide), thence binding on and running with said A&T Lot 806 the following four (4) courses and distances

1) South 89° 49' 29" East, 7.15 feet to a point; thence

2) South 00° 10' 31" West, 12.64 feet to a point; thence

3) North 89° 49' 29" West, 7.15 feet to a point on said water table of the IRS building; thence running with the water table along the face of said IRS building

4) North 00° 10' 31" East, 12.64 feet to the Point of Beginning:

Containing 90 square feet or 0.00207 of an acre of land.

Said Lots 7000, 7001 and 7003 having a lower limit of elevation of 11.30 feet and an upper limit of elevation of 35.21 feet in the datum of the District of Columbia Department of Public Works.

NOTE: As of the date of certification, the land herein described (the "Land") is designated among the Records of the Assessor of the District of Columbia, for assessment and taxation purposes, as Lots 7000, 7001 and 7002 in Square 324.

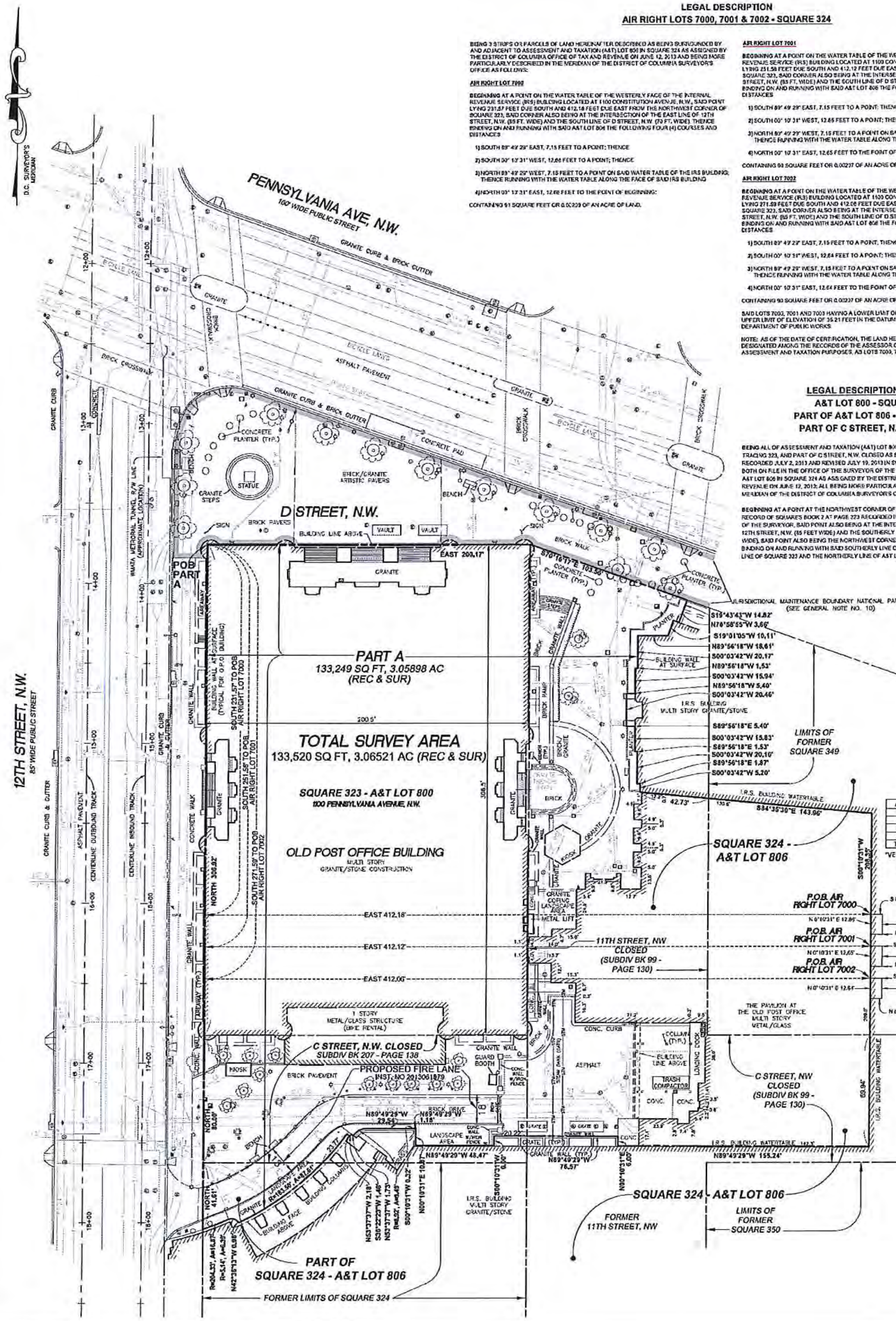

AIR RIGHT LOT AREA TABLE*		
LOT	SQ. FT.	ACRES
7000	91	0.00209
7001	90	0.00207
7002	90	0.00207
TOTAL	271	0.00623

*VERTICAL LIMITS FOR EACH PART:
LOWER LIMIT ELEV.=11.30
UPPER LIMIT ELEV.=35.21

LEGAL DESCRIPTION
AIR RIGHT LOTS 7000, 7001 & 7002 - SQUARE 324

BEING 3 STRIPS OR PARCELS OF LAND HEREINAFTER DESCRIBED AS BEING SURROUNDED BY AND ADJACENT TO ASSESSMENT AND TAXATION (A&T) LOT 806 IN SQUARE 324 AS ASSIGNED BY THE DISTRICT OF COLUMBIA OFFICE OF TAX AND REVENUE ON JUNE 12, 2013 AND BEING MORE PARTICULARLY DESCRIBED IN THE MERIDIAN OF THE DISTRICT OF COLUMBIA SURVEYOR'S OFFICE AS FOLLOWS:

AIR RIGHT LOT 7000

BEGINNING AT A POINT ON THE WATER TABLE OF THE WESTERLY FACE OF THE INTERNAL REVENUE SERVICE (IRS) BUILDING LOCATED AT 1100 CONSTITUTION AVENUE, N.W., SAID POINT LYING 231.57 FEET DUE SOUTH AND 412.18 FEET DUE EAST FROM THE NORTHWEST CORNER OF SQUARE 323, SAID CORNER ALSO BEING AT THE INTERSECTION OF THE EAST LINE OF 12TH STREET, N.W. (85 FT. WIDE) AND THE SOUTH LINE OF D STREET, N.W. (70 FT. WIDE). THENCE BINDING ON AND RUNNING WITH SAID A&T LOT 806 THE FOLLOWING FOUR (4) COURSES AND DISTANCES

1) SOUTH 89° 49' 29" EAST, 7.15 FEET TO A POINT; THENCE

2) SOUTH 00° 10' 31" WEST, 12.66 FEET TO A POINT; THENCE

3) NORTH 89° 49' 29" WEST, 7.15 FEET TO A POINT ON SAID WATER TABLE OF THE IRS BUILDING; THENCE RUNNING WITH THE WATER TABLE ALONG THE FACE OF SAID IRS BUILDING

4) NORTH 00° 10' 31" EAST, 12.66 FEET TO THE POINT OF BEGINNING:

CONTAINING 91 SQUARE FEET OR 0.00209 OF AN ACRE OF LAND.

AIR RIGHT LOT 7001

BEGINNING AT A POINT ON THE WATER TABLE OF THE WESTERLY FACE OF THE INTERNAL REVENUE SERVICE (IRS) BUILDING LOCATED AT 1100 CONSTITUTION AVENUE, N.W., SAID POINT LYING 251.58 FEET DUE SOUTH AND 412.12 FEET DUE EAST FROM THE NORTHWEST CORNER OF SQUARE 323, SAID CORNER ALSO BEING AT THE INTERSECTION OF THE EAST LINE OF 12TH STREET, N.W. (85 FT. WIDE) AND THE SOUTH LINE OF D STREET, N.W. (70 FT. WIDE). THENCE BINDING ON AND RUNNING WITH SAID A&T LOT 806 THE FOLLOWING FOUR (4) COURSES AND DISTANCES

1) SOUTH 89° 49' 29" EAST, 7.15 FEET TO A POINT; THENCE

2) SOUTH 00° 10' 31" WEST, 12.65 FEET TO A POINT; THENCE

3) NORTH 89° 49' 29" WEST, 7.15 FEET TO A POINT ON SAID WATER TABLE OF THE IRS BUILDING; THENCE RUNNING WITH THE WATER TABLE ALONG THE FACE OF SAID IRS BUILDING

4) NORTH 00° 10' 31" EAST, 12.65 FEET TO THE POINT OF BEGINNING:

CONTAINING 90 SQUARE FEET OR 0.00207 OF AN ACRE OF LAND.

AIR RIGHT LOT 7002

BEGINNING AT A POINT ON THE WATER TABLE OF THE WESTERLY FACE OF THE INTERNAL REVENUE SERVICE (IRS) BUILDING LOCATED AT 1100 CONSTITUTION AVENUE, N.W., SAID POINT LYING 271.59 FEET DUE SOUTH AND 412.06 FEET DUE EAST FROM THE NORTHWEST CORNER OF SQUARE 323, SAID CORNER ALSO BEING AT THE INTERSECTION OF THE EAST LINE OF 12TH STREET, N.W. (85 FT. WIDE) AND THE SOUTH LINE OF D STREET, N.W. (70 FT. WIDE). THENCE BINDING ON AND RUNNING WITH SAID A&T LOT 806 THE FOLLOWING FOUR (4) COURSES AND DISTANCES

1) SOUTH 89° 49' 29" EAST, 7.15 FEET TO A POINT; THENCE

2) SOUTH 00° 10' 31" WEST, 12.64 FEET TO A POINT; THENCE

3) NORTH 89° 49' 29" WEST, 7.15 FEET TO A POINT ON SAID WATER TABLE OF THE IRS BUILDING; THENCE RUNNING WITH THE WATER TABLE ALONG THE FACE OF SAID IRS BUILDING

4) NORTH 00° 10' 31" EAST, 12.64 FEET TO THE POINT OF BEGINNING:

CONTAINING 90 SQUARE FEET OR 0.00207 OF AN ACRE OF LAND.

SAID LOTS 7000, 7001 AND 7002 HAVING A LOWER LIMIT OF ELEVATION OF 11.30 FEET AND AN UPPER LIMIT OF ELEVATION OF 35.21 FEET IN THE DATUM OF THE DISTRICT OF COLUMBIA DEPARTMENT OF PUBLIC WORKS.

NOTE: AS OF THE DATE OF CERTIFICATION, THE LAND HEREIN DESCRIBED (THE "LAND") IS DESIGNATED AMONG THE RECORDS OF THE ASSESSOR OF THE DISTRICT OF COLUMBIA, FOR ASSESSMENT AND TAXATION PURPOSES, AS LOTS 7000, 7001 AND 7002 IN SQUARE 324.

LEGAL DESCRIPTION - PART A
A&T LOT 800 - SQUARE 323
PART OF A&T LOT 806 - SQUARE 324
PART OF C STREET, N.W. CLOSED

BEING ALL OF ASSESSMENT AND TAXATION (A&T) LOT 800 IN SQUARE 323 AS SHOWN ON A & T TRACING 323, AND PART OF C STREET, N.W. CLOSED AS SHOWN ON A FLAT OF SUBDIVISION RECORDED JULY 2, 2013 AND REVISED JULY 19, 2013 IN SUBDIVISION BOOK 207 AT PAGE 138, BOTH ON FILE IN THE OFFICE OF THE SURVEYOR OF THE DISTRICT OF COLUMBIA AND PART OF A&T LOT 806 IN SQUARE 324 AS ASSIGNED BY THE DISTRICT OF COLUMBIA OFFICE OF TAX AND REVENUE ON JUNE 12, 2013; ALL BEING MORE PARTICULARLY DESCRIBED AS FOLLOWS IN THE MERIDIAN OF THE DISTRICT OF COLUMBIA SURVEYOR'S OFFICE:

BEGINNING AT A POINT AT THE NORTHWEST CORNER OF SQUARE 323 AS SHOWN IN ORIGINAL RECORD OF SQUARES BOOK 2 AT PAGE 323 RECORDED IN THE SAID RECORDS OF THE OFFICE OF THE SURVEYOR, SAID POINT ALSO BEING AT THE INTERSECTION OF THE EASTERLY LINE OF 12TH STREET, N.W. (85 FEET WIDE) AND THE SOUTHERLY LINE OF D STREET, N.W. (70 FEET WIDE), SAID POINT ALSO BEING THE NORTHWEST CORNER OF SAID A&T LOT 800; THENCE BINDING ON AND RUNNING WITH SAID SOUTHERLY LINE OF D STREET, N.W., THE NORTHERLY LINE OF SQUARE 323 AND THE NORTHERLY LINE OF A&T LOT 800

LEGAL DESCRIPTION - PART A (CONTINUED)

1) DUE EAST, 200.17 FEET (RECORD AND SURVEY) TO A POINT AT THE NORTHEAST CORNER OF SQUARE 323, SAID POINT ALSO BEING THE NORTHWEST CORNER OF SAID A&T LOT 806 IN SQUARE 324; THENCE LEAVING SQUARE 323 AND BINDING ON AND RUNNING WITH THE SOUTHERLY LINE OF PENNSYLVANIA AVENUE, N.W. (160 FEET WIDE), THE NORTHERLY LINE OF 11TH STREET, N.W. CLOSED AS SHOWN ON A PLAT OF SUBDIVISION RECORDED IN SUBDIVISION BOOK 99 AT PAGE 130 AMONG THE SAID RECORDS OF THE OFFICE OF THE SURVEYOR AND THE NORTHERLY LINE OF SAID A&T LOT 806

2) SOUTH 70° 16' 17" EAST, 103.58 FEET (RECORD AND SURVEY) TO A POINT; THENCE RUNNING AT A RIGHT ANGLE TO PENNSYLVANIA AVENUE, N.W. AND BEING COLLINEAR WITH THE NORTHWESTERLY LINE OF A GRANITE WALL ENCLOSING AN AREAWAY OF THE ADJACENT INTERNAL REVENUE SERVICE (IRS) BUILDING LOCATED AT 1100 CONSTITUTION AVENUE, N.W. AND ALSO RUNNING IN, THROUGH, OVER AND ACROSS SAID 11TH STREET, N.W. CLOSED THE FOLLOWING FIFTEEN (15) COURSES AND DISTANCES

3) SOUTH 19° 43' 43" WEST, 14.82 FEET (RECORD AND SURVEY) TO A POINT; THENCE RUNNING PARALLEL TO AND APPROXIMATELY 3.17 FEET OFF OF THE WATER TABLE OF SAID IRS BUILDING THE FOLLOWING SIX (6) COURSES AND DISTANCES

4) NORTH 70° 58' 55" WEST, 3.66 FEET (RECORD AND SURVEY) TO A POINT; THENCE

5) SOUTH 19° 01' 05" WEST, 10.11 FEET (RECORD AND SURVEY) TO A POINT; THENCE

6) NORTH 89° 56' 18" WEST, 18.61 FEET (RECORD AND SURVEY) TO A POINT; THENCE

7) SOUTH 00° 03' 42" WEST, 20.17 FEET (RECORD AND SURVEY) TO A POINT; THENCE

8) NORTH 89° 56' 18" WEST, 1.53 FEET (RECORD AND SURVEY) TO A POINT; THENCE

9) SOUTH 00° 03' 42" WEST, 15.94 FEET (RECORD AND SURVEY) TO A POINT; THENCE RUNNING WITH THE BASE OF A GRANITE WALL AT A WESTERN ENTRANCE TO SAID IRS BUILDING

10) NORTH 89° 56' 18" WEST, 5.40 FEET (RECORD AND SURVEY) TO A POINT; THENCE RUNNING THROUGH GRANITE WALLS AND PARALLEL TO SAID IRS BUILDING

11) SOUTH 00° 03' 42" WEST, 20.46 FEET (RECORD AND SURVEY) TO A POINT; THENCE RUNNING WITH THE BASE OF A GRANITE WALL AT A WESTERN ENTRANCE TO SAID IRS BUILDING

12) SOUTH 89° 56' 18" EAST, 5.40 FEET (RECORD AND SURVEY) TO A POINT; THENCE RUNNING PARALLEL TO AND APPROXIMATELY 0.17 FEET OFF OF THE WATER TABLE OF SAID IRS BUILDING THE FOLLOWING SIX (6) COURSES AND DISTANCES

13) SOUTH 00° 03' 42" WEST, 15.83 FEET (RECORD AND SURVEY) TO A POINT; THENCE

14) SOUTH 89° 56' 18" EAST, 1.53 FEET (RECORD AND SURVEY) TO A POINT; THENCE

15) SOUTH 00° 03' 42" WEST, 20.10 FEET (RECORD AND SURVEY) TO A POINT; THENCE

16) SOUTH 89° 56' 18" EAST, 1.87 FEET (RECORD AND SURVEY) TO A POINT; THENCE

17) SOUTH 00° 03' 42" WEST, 5.20 FEET (RECORD AND SURVEY) TO A POINT; THENCE

18) SOUTH 84° 35' 30" EAST, 143.96 FEET (RECORD AND SURVEY) TO A POINT, CROSSING THE EAST LINE OF SAID 11TH STREET, N.W. CLOSED AND THE WEST LINE OF FORMER SQUARE 349 AS SHOWN IN ORIGINAL RECORD OF SQUARES BOOK 2 AT PAGE 349 RECORDED IN THE SAID RECORDS OF THE OFFICE OF THE SURVEYOR AT A DISTANCE OF 42.73 FEET (RECORD AND SURVEY) FROM THE BEGINNING OF THIS COURSE; THENCE BINDING ON AND RUNNING WITH ON THE WATER TABLE OF SAID IRS BUILDING

19) SOUTH 00° 10' 31" WEST, 208.35 FEET (RECORD AND SURVEY) TO A POINT, CROSSING THE SOUTH LINE OF SAID FORMER SQUARE 349 AND THE NORTH LINE OF C STREET, N.W. CLOSED PER SAID PLAT OF SUBDIVISION RECORDED IN SUBDIVISION BOOK 99 AT PAGE 130 AT A DISTANCE OF 69.94 FEET (RECORD AND SURVEY) FROM THE END OF THIS COURSE; THENCE RUNNING PARALLEL TO AND APPROXIMATELY 0.5 FEET NORTH OF THE NORTH FACE OF SAID IRS BUILDING

20) NORTH 89° 49' 29" WEST, 155.24 FEET (RECORD AND SURVEY) TO A POINT INTERSECTING THE GRANITE WALL SURROUNDING THE AREAWAY FOR THE IRS BUILDING; THENCE RUNNING WITH THE OUTSIDE FACE OF THE GRANITE WALL THE FOLLOWING THREE (3) COURSES AND DISTANCES

21) NORTH 00° 10' 31" EAST, 6.00 FEET (RECORD AND SURVEY) TO A POINT; THENCE

22) NORTH 89° 49' 29" WEST, 76.57 FEET (RECORD AND SURVEY) TO A POINT, CROSSING THE WEST LINE OF SAID A&T LOT 806 IN SQUARE 324, THE WEST LINE OF SAID C STREET, N.W. CLOSED PER SAID SUBDIVISION BOOK 99 AT PAGE 130 AND THE EAST LINE OF C STREET, N.W. CLOSED AS SHOWN ON A PLAT OF SUBDIVISION RECORDED IN SUBDIVISION BOOK 207 AT PAGE 138 AT A DISTANCE 20.22 FEET (RECORD AND SURVEY) FROM THE END OF THIS COURSE; THENCE

23) SOUTH 00° 10' 31" WEST, 6.00 FEET (RECORD AND SURVEY) TO A POINT; THENCE RUNNING PARALLEL TO AND APPROXIMATELY 0.5 FEET NORTH OF THE NORTH FACE OF SAID IRS BUILDING

24) NORTH 89° 49' 29" WEST, 48.47 FEET (RECORD AND SURVEY) TO A POINT INTERSECTING A GRANITE WALL; THENCE RUNNING WITH THE OUTSIDE FACE OF THE GRANITE WALL THE FOLLOWING THREE (3) COURSES AND DISTANCES

25) NORTH 00° 10' 31" EAST, 10.87 FEET (RECORD AND SURVEY) TO A POINT; THENCE

26) NORTH 89° 49' 29" WEST, 1.18 FEET (RECORD AND SURVEY) TO A POINT; THENCE

27) SOUTH 00° 10' 31" WEST, 0.32 FEET (RECORD AND SURVEY) TO A POINT; THENCE BINDING ON AND RUNNING WITH THE EDGE OF THE BOTTOM GRANITE STEP THE FOLLOWING TWO (2) COURSES AND DISTANCES

28) NORTH 89° 49' 29" WEST, 29.54 FEET (RECORD AND SURVEY) TO A POINT; THENCE

29) 9.49 FEET ALONG THE ARC OF A CURVE TO THE LEFT HAVING A RADIUS OF 8.92 FEET, A DELTA ANGLE OF 60° 59' 13" AND A CHORD BEARING AND DISTANCE OF SOUTH 59° 41' 25" WEST, 9.05 FEET (RECORD AND SURVEY) TO A POINT; THENCE RUNNING WITH THE FACE OF THE BUILDING COLUMN THE FOLLOWING TWO (2) COURSES AND DISTANCES

30) NORTH 53° 37' 37" WEST, 1.73 FEET (RECORD AND SURVEY) TO A POINT; THENCE

31) SOUTH 36° 22' 23" WEST, 1.49 FEET (RECORD AND SURVEY) TO A POINT; THENCE RUNNING WITH AND BINDING ON THE EDGE OF A GRANITE BORDER THE FOLLOWING FIVE (5) COURSES AND DISTANCES

32) NORTH 53° 37' 37" WEST, 2.18 FEET (RECORD AND SURVEY) TO A POINT; THENCE

33) 87.61 FEET ALONG THE ARC OF A CURVE TO THE RIGHT HAVING A RADIUS OF 183.50 FEET, A DELTA ANGLE OF 27° 21' 15" AND A CHORD BEARING AND DISTANCE OF SOUTH 50° 15' 14" WEST, 86.78 FEET (RECORD AND SURVEY) TO A POINT, CROSSING THE SOUTH LINE OF SAID C STREET, N.W. CLOSED PER SAID SUBDIVISION BOOK 207 AT PAGE 138, THE FORMER NORTHERLY LINE OF SQUARE 324 AS SHOWN IN ORIGINAL RECORD OF SQUARES BOOK 2 AT PAGE 324 AND A NORTH LINE OF SAID A&T LOT 806 IN SQUARE 324 AT A DISTANCE 23.77 FEET (RECORD AND SURVEY) ALONG SAID ARC FROM THE BEGINNING OF THIS COURSE; THENCE

34) NORTH 42° 36' 13" WEST, 0.98 FEET (RECORD AND SURVEY) TO A POINT; THENCE

35) 6.39 FEET ALONG THE ARC OF A CURVE TO THE LEFT HAVING A RADIUS OF 5.14 FEET, A DELTA ANGLE OF 71° 17' 25" AND A CHORD BEARING AND DISTANCE OF NORTH 73° 14' 55" WEST, 5.99 FEET (RECORD AND SURVEY) TO A POINT; THENCE

36) 15.87 FEET ALONG THE ARC OF A CURVE TO THE RIGHT HAVING A RADIUS OF 204.33 FEET, A DELTA ANGLE OF 4° 43' 57" AND A CHORD BEARING AND DISTANCE OF SOUTH 66° 28' 15" WEST, 15.87 FEET (RECORD AND SURVEY) TO A POINT ON THE SAID EAST LINE OF 12TH STREET, N.W.; THENCE RUNNING WITH AND BINDING ON SAID EAST LINE THE FOLLOWING THREE (3) COURSES AND DISTANCES

37) DUE NORTH, 41.61 FEET (RECORD AND SURVEY) TO A POINT ON THE SOUTHWEST CORNER OF SAID C STREET, N.W. CLOSED AS SHOWN IN SAID SUBDIVISION BOOK 207 AT PAGE 138; THENCE RUNNING WITH AND BINDING ON THE WEST LINE OF SAID C STREET, N.W. CLOSED

38) DUE NORTH, 60.00 FEET (RECORD AND SURVEY) TO A POINT ON THE NORTHWEST CORNER OF SAID C STREET, N.W. CLOSED AND THE SOUTHWEST CORNER OF SAID SQUARE 323; THENCE RUNNING WITH AND BINDING ON THE WEST LINE OF SAID SQUARE 323 AND THE WEST LINE OF SAID A&T LOT 800

39) DUE NORTH, 308.92 FEET (RECORD AND SURVEY) TO THE POINT OF BEGINNING.

CONTAINING AN AREA FOR PART A OF 133,249 SQUARE FEET OR 3.05898 ACRES OF LAND (RECORD AND SURVEY), MORE OR LESS.

NOTE: AS OF THE DATE OF CERTIFICATION, THE LAND HEREIN DESCRIBED (THE "LAND") IS DESIGNATED AMONG THE RECORDS OF THE ASSESSOR OF THE DISTRICT OF COLUMBIA, FOR ASSESSMENT AND TAXATION PURPOSES, AS LOT 800 AND AN A&T LOT AS YET UNDESIGNATED FOR A PORTION OF C STREET, NW CLOSED PER SUBDIVISION BOOK 207 AT PAGE 138 IN SQUARE 323 AND LOT 806 IN SQUARE 324. IN CONTEMPLATION OF FUTURE COMBINATIONS OR RECONFIGURATION OF THE LAND AND SUBSEQUENT ASSIGNMENT OF A&T LOT NUMBERS, THE LAND WILL BE KNOWN BY THOSE SUBSEQUENTLY ASSIGNED A&T LOTS.

LEGEND

- STORM DRAIN MANHOLE
- SANITARY SEWER MANHOLE
- CLEANOUT
- COMMUNICATIONS MANHOLE
- UNKNOWN MANHOLE
- UNKNOWN VALVE
- GAS MANHOLE
- GAS VALVE
- WATER MANHOLE
- SIAMESE CONNECTION
- WATER METER
- FIRE HYDRANT
- IRRIGATION VALVE
- LAMP POST
- LIGHT POLE WITH ARM
- TRAFFIC SIGNAL POLE
- FLAG POLE
- BOLLARD
- REFLECTOR POST
- MAILBOX
- TABLE WITH BENCHES
- SIGN
- LANDSCAPE TREE WITH PLANTER
- (DATR) DATA ACCORDING TO RECORD
- CS COMBINED SEWER
- STORM SEWER LINE
- SANITARY SEWER LINE
- PROPERTY LINE
- WATER LINE
- TELECOMMUNICATIONS LINE
- GAS LINE
- ELECTRIC LINE
- STEAM BANK
- BUILDING LINE
- JURISDICTIONAL MAINTENANCE BOUNDARY
- PROPERTY LINE
- INTERMEDIATE PROPERTY LINE

GENERAL NOTES

1. HORIZONTAL DATUM: DISTRICT OF COLUMBIA SURVEYOR'S OFFICE (DCSO)
VERTICAL DATUM: DISTRICT OF COLUMBIA DEPARTMENT OF PUBLIC WORKS (DCDPW)

2. AREA:
PART A SQUARE 323-A&T LOT 800 = 61,436 SQUARE FEET
PART OF SQUARE 324-A&T LOT 806 = 57,686 SQUARE FEET
PART OF C STREET, NW CLOSED = 14,127 SQUARE FEET
TOTAL = 133,249 SQUARE FEET OR 3.05898 ACRES (RECORD AND SURVEY)

AIR RIGHT LOTS 7000, 7001 & 7002 - SQUARE 324
271 SQUARE FEET OR 0.00623 ACRES (RECORD AND SURVEY)

TOTAL AREA = 133,520 SQUARE FEET OR 3.06521 ACRES (RECORD AND SURVEY)

3. PROPERTY SHOWN AMONG THE RECORDS OF THE D.C. SURVEYOR'S OFFICE AS FOLLOWS:
- ORIGINAL RECORD OF SQUARES BOOK 2 - PAGE 323
- SUBDIVISION BOOK 207 - PAGE 138
- SUBDIVISION BOOK 99 - PAGE 130
- SURVEY BOOK 204 - PAGE 190 (SURVEYOR'S OFFICE MAP NO. 10307)
- ASSESSMENT AND TAXATION PLAT 3532-J
- ASSESSMENT AND TAXATION TRACING 323

4. PROPERTY ZONED: CURRENTLY UNZONED WITH A PENDING DD/C-4 ZONING CLASSIFICATION AS DETERMINED FROM THE ZONING MAP SHOWN ON THE DC OFFICE OF ZONING WEBSITE. ALL DATA ON THIS ZONING MAP SHOULD BE CONSIDERED APPROXIMATE. TO OFFICIALLY CERTIFY ZONING ON ANY PROPERTY IN ORDER TO SATISFY LEGAL REQUIREMENTS, USERS SHOULD CONTACT THE DISTRICT OF COLUMBIA OFFICE OF ZONING AT (202) 727-6311.

5. THE PROPERTY SHOWN HEREON LIES IN ZONE "A" SPECIAL FLOOD HAZARD AREA AS ESTABLISHED BY THE U. S. FEDERAL EMERGENCY MANAGEMENT AGENCY, NATIONAL FLOOD INSURANCE PROGRAM, FLOOD INSURANCE RATE MAPS, COMMUNITY PANEL NO. 1100010019C, MAP REVISED SEPTEMBER 27, 2010.

6. PROPERTY CORNER MARKERS NOT SET AS PART OF THIS SURVEY.

7. BOUNDARY INFORMATION SHOWN HEREON WAS OBTAINED FROM OFFICIAL CITY RECORDS AND VERIFIED IN THE FIELD INSOFAR AS POSSIBLE. PROPERTY LINE DIMENSIONS FROM OFFICIAL RECORDS MAY NOT NECESSARILY AGREE WITH ACTUAL MEASURED DIMENSIONS. ALL PROPERTY LINES IN THE DISTRICT OF COLUMBIA ARE SUBJECT TO CHANGE BY THE OFFICE OF THE SURVEYOR, D.C.

8. THE LOCATION OF ALL UTILITIES SHOWN HEREON ARE FROM FIELD INVESTIGATION, VISIBLE FIELD EVIDENCE AND AVAILABLE RECORDS AND CANNOT BE GUARANTEED. NO SUBSURFACE UTILITY DESIGNATION WAS PERFORMED AS PART OF THIS SURVEY. CONTRACTOR/ENGINEERS SHOULD DIG TEST PITS BY HAND AT ALL UTILITY CROSSINGS TO VERIFY EXACT LOCATIONS.
UTILITY RECORDS HAVE NOT BEEN RECEIVED FROM PEPCO AS OF THE DATE OF THIS SURVEY.

9. THE NORTH, SOUTH, AND EAST EXTERIOR WALLS OF THE METAL/GLASS PAVILION WERE NOT PHYSICALLY ACCESSIBLE AND THEREFORE ARE NOT SHOWN.

10. THE BOUNDARIES SHOWN HEREON DEPICTED AS "JURISDICTIONAL MAINTENANCE BOUNDARIES" OF THE NATIONAL PARK SERVICE HAVE BEEN DRAWN BASED ON A DRAWING ENTITLED "JURISDICTIONAL MAINTENANCE BOUNDARIES, 12TH STREET TO 10TH STREET", SHEET 7 OF 25, PREPARED FOR THE PENNSYLVANIA AVENUE DEVELOPMENT CORPORATION, DATED FEBRUARY 28 1996, AS AUTHORIZED BY VIRTUE OF PUBLIC LAW 104-134, SECTION 313(c), THE NATIONAL PARK SERVICE HAS THE RIGHT, TITLE, AND INTEREST IN AND TO THE PROPERTY LOCATED IN THE PENNSYLVANIA AVENUE NATIONAL HISTORIC SITE INCLUDING PARKS, PLAZAS, SIDEWALK, SPECIAL LIGHTING, TREES, SCULPTURE, AND MEMORIALS.

11. FIRST AMERICAN TITLE INSURANCE COMPANY COMMITMENT FOR TITLE INSURANCE NO. NCS-583183-DC72, EFFECTIVE DATE JANUARY 22, 2013, REVISED JULY 25, 2013 WAS RECEIVED, EXAMINED AND RELIED UPON IN PREPARING THIS SURVEY.

SURVEY COMMENTS TO
SCHEDULE B - SECTION 2 EXCEPTIONS

FIRST AMERICAN TITLE INSURANCE COMPANY
COMMITMENT FOR TITLE INSURANCE NO; NCS-583383-DC72
EFFECTIVE DATE: JANUARY 22, 2013
REVISED: JULY 25, 2013

AS TO ITEM 9, COVENANTS, CONDITIONS, TERMS AND EASEMENTS IN THAT CERTAIN DECLARATION OF COVENANTS DATED MAY 9, 2013 AND RECORDED MAY 29, 2013 AS INSTRUMENT NO. 2013061879 AFFECT THE SUBJECT PROPERTY (AFFECTS PARCEL 1 ONLY). THE PROPOSED FIRE LANE DESCRIBED THEREIN HAS BEEN SHOWN HEREON.

SURVEYOR'S CERTIFICATE

TO:
UNITED STATES GENERAL SERVICES ADMINISTRATION
UNITED STATES OF AMERICA
FIRST AMERICAN TITLE INSURANCE COMPANY
FIDELITY NATIONAL TITLE INSURANCE COMPANY
TRUMP OLD POST OFFICE LLC

THIS IS TO CERTIFY THAT THIS MAP OR PLAT AND THE SURVEY ON WHICH IT IS BASED WERE MADE IN ACCORDANCE WITH THE 2011 MINIMUM STANDARD DETAIL REQUIREMENTS FOR ALTA/ACSM LAND TITLE SURVEYS, JOINTLY ESTABLISHED AND ADOPTED BY ALTA AND NSPS, AND INCLUDES ITEMS 2, 3, 4, 8, 9, 13, 11(A), 12, 13 AND 17 OF TABLE A THEREOF. THE FIELD WORK WAS COMPLETED ON MARCH 20, 2013. PURSUANT TO THE ACCURACY STANDARDS AS ADOPTED BY ALTA AND NSPS AND IN EFFECT ON THE DATE OF THIS CERTIFICATION, THE UNDERSIGNED FURTHER CERTIFIES THAT IN MY PROFESSIONAL OPINION, AS A LAND SURVEYOR LICENSED IN THE DISTRICT OF COLUMBIA, THE RELATIVE POSITIONAL ACCURACY OF THIS SURVEY DOES NOT EXCEED THAT WHICH IS SPECIFIED THEREIN.

[signature] 7-26-13
DATE

DANIEL R. SCHRIEVER
LICENSED SURVEYOR
DISTRICT OF COLUMBIA, LICENSE NO. LS900569
FOR A. MORTON THOMAS AND ASSOCIATES, INC.

DISTRICT OF COLUMBIA · DANIEL R. SCHRIEVER · LS900569 · LICENSED · LAND SURVEYOR

PROPERTY OF THE UNITED STATES GOVERNMENT — FOR OFFICIAL USE ONLY. Do not remove this notice. Properly destroy documents when no longer needed.

GSA GENERAL SERVICES ADMINISTRATION
NATIONAL CAPITOL REGION
7TH & D STREETS, SW
WASHINGTON, DC 20407

AMT
A. MORTON THOMAS AND ASSOCIATES, INC.
CONSULTING ENGINEERS
12750 TWINBROOK PARKWAY
ROCKVILLE, MD 20852-1700
PH.(301)881-2545 FAX:(301)881-0814

ALTA / ACSM LAND TITLE SURVEY
DANIEL R. SCHRIEVER
LICENSED LAND SURVEYOR
DISTRICT OF COLUMBIA, LICENSE NO. LS900569
AMT PROJECT NO. 108-666.003

CERTIFICATIONS

KEY PLAN

VICINITY MAP
NOT TO SCALE

REVISION NOTES

MARK	DATE	DESCRIPTION

GRAPHIC SCALE

USE GRAPHIC SCALE FOR REDUCED PRINTS
30 15 0 15 30 60
(IN FEET)
1 INCH = 30 FEET

CONTRACTORS	A/E CON. NO.	
	A/E TASK NO.	
	CONS. CONTR.	---
	CONS. WORK	
	PRIME A/E	---
	SUB A/E	
	CONSTR. CON.	
BUILDING	NAME	OLD POST OFFICE BUILDING
	STREET	1100 PENNSLYVANIA AVENUE, N.W.
	CITY/ST./ZIP	WASHINGTON, D.C. 20037
	BUILDING NO.	---
	OTHER BUILDING NOs.	
	FACILITY CODE	
PROJECT	PROJECT TITLE	OLD POST OFFICE BUILDING
	PROJECT DESCRIPTION	ALTA/ACSM LAND TITLE SURVEY
	PROJECT NO.	N/A
	GSA PM	
	SUBMISSION	FINAL
	SUB. DATE	JULY 26, 2013
DRAWING	DRAWING NO.	V 101 00 (DISCIPLINE / SHEET TYPE / SEQUENCE)
		SHEET 1 OF 1

EXHIBIT E-1

TITLE EXCEPTIONS

1. Rights of Government Antennae Tenants under the Antennae Agreements.

2. Taxes subsequent to the Commencement Date, which is a lien not yet due and payable.

3. Any facts, rights, interests or claims that may exist or arise by reason of the following matters disclosed by an ALTA/ACSM survey made by A. Morton Thomas and Associates, Inc. on July 25, 2013, designated Drawing Number V 101 00: The following all affect Part A only.

   a. Gas lines in the Closed C Street
   b. Sewer lines and sanitary sewer manholes in Closed C Street and in Lot 806 in Square 324
   c. Storm drain lines and storm drain manholes in Closed 11th Street, and in Lot 806 in Square 324
   d. Electric lines and unidentified electric structures in Closed C Street and in Lot 806 in Square 324
   e. 18" and 12" RCPs, 10", 6" and 4" PVCs in Closed 11th Street, and 8" PVCs in Closed 11th Street and in Closed C Street
   f. Water lines, manholes and meters in Closed C Street and in Closed 11th Street
   g. Communication manholes and telecommunications lines in Closed C Street and in Lot 806 in Square 324

4. Utility lines and structures lying within the bed of C Street, closed per plat recording in Subdivision Book 207 at page 138 among the records of the Surveyor's Office of the District of Columbia, and rights of the owners thereto. (Affects Part A only).

5. Covenants, conditions, terms and easements in that certain Declaration of Covenants dated May 9, 2013, by the United States of America, acting by and through the Administrator of General Services and authorized representatives, for the benefit of the District of Columbia, a municipal corporation, recorded May 29, 2013 as Instrument No. 2013061879.

6. Tenant's performance of the obligations, covenants, restrictions, conditions, rent and lease term affecting the Tenant's right to the use and occupancy of the Land, and Landlord's reserved rights in and to the reversionary estate in the Title to the Land all as expressly set forth in the Lease and subject to the terms thereof, and

   Access rights of the public and the GSA in the leased premises, and retained rights of the National Park Service in the Clock Tower, all as expressly set forth in the Lease and subject to the terms thereof.

For the avoidance of doubt, the following title exceptions that may be listed on Tenant's title insurance policy shall not be considered Title Exceptions and Landlord shall not be in default under this Lease and shall have no obligations hereunder for failing to remove any of the following from Tenant's title policy as of Exclusive Possession:

A. Loss or damage which may be sustained by reason of the failure of a Memorandum of Lease to be property recorded among the Land Records of the District of Columbia, including but not limited to liens, encumbrances, adverse claims or other matters, if any, created, first appearing in the public records or attaching subsequent to the Commencement Date but prior to the date the Lease

or Memorandum thereof conveying a leasehold estate to Tenant is recorded in the Land Records of the District of Columbia; unless caused by Landlord, in which case this exception would fall under Exhibit E-2.